Western Engineering

VOL. 4 SAN FRANCISCO, APRIL, 1914 NO. 4

PUBLISHED MONTHLY BY THE WESTERN ENGINEERING PUBLISHING CO. AT 420 MARKET STREET, SAN FRANCISCO.

Entered as second-class matter, June 1, 1912, at the post-office at San Francisco, California, under Act of March 3, 1879

Telephone Kearny 4777. Cable Address: Pertusola. Code: Bedford McNeill (2 editions).

BRANCH OFFICES:

CHICAGO—734 Monadnock Building. NEW YORK—Woolworth Building.
LONDON—The Mining Magazine, Salisbury House, E.C.

ANNUAL SUBSCRIPTION:

United States and Possessions, and Mexico..... $3
Other Countries in Postal Union 4

CHARLES T. HUTCHINSON, Editor L. A. GREENE, Business Manager H. L. QUIGLEY, Advertising Manager

TABLE OF CONTENTS

EDITORIAL: Page.
Notes 247
Stocks and Bonds 249

REVIEW OF THE MONTH 251

ARTICLES:
Feed-Water Heaters, Closed Type ..... *C. F. Braun* 255
Seaport Studies ..... *Charles Evan Fowler* 267
Graphical Studies of Oil Formations..... *A. T. Parsons* 278
Trade Wastes at Stockton, California..... *E. L. Grunsky* 282
Engineering Problems of the Hetch-Hetchy Grant..... *M. M. O'Shaughnessy* 287
Oil Refinery in Persia 292
Highway Improvements, King County, Washington..... *Arthur P. Denton* 293
Midway and Sunset Fields ..... *R. P. McLaughlin* 296
Petroleum Production in Peru 299

THE ENGINEERING DIGEST:
International Engineering Congress, 1915 300
The Diesel Engine 301
Oil and Gas in Utah 303
The Patent Processes for Making Casing-Head Gasoline..... *H. O. Chute* 304
Vitrified Brick Pavements ..... *George W. Kummer* 306
Road Maintenance Methods and Costs for Year 1913 in Wayne County, Michigan. 309

HINTS ON PRACTICE:
An Apparatus for Making the Flash and Fire Tests of Lubricating Oils..... *H. L. Siever* 311

BOOK REVIEWS 312

INDUSTRIAL PROGRESS:
Lennox Serpentine Shear 313

OBITUARY:
George Westinghouse 314

COMPANY REPORTS 317
ENGINEER'S NOTE BOOK 318
ENGINEERING NEWS 319
PERSONAL 324
CATALOGUES RECEIVED 324

Generated on 2024-09-30 00:29 GMT / https://hdl.handle.net/2027/uiug.30112007838003
Public Domain, Google-digitized / http://www.hathitrust.org/access_use#pd-google
Digitized by Google
Original from UNIVERSITY OF ILLINOIS AT URBANA-CHAMPAIGN

GUSHER ON THE PROPERTY OF THE RECORD OIL COMPANY NEAR FELLOWS, CALIFORNIA.

Generated on 2024-09-30 00:32 GMT / https://hdl.handle.net/2027/uiug.30112007838003
Public Domain, Google-digitized / http://www.hathitrust.org/access_use#pd-google
Digitized by Google
Original from
UNIVERSITY OF ILLINOIS AT
URBANA-CHAMPAIGN

EDITORIAL

THE great length of the new North German Lloyd steamer *Imperator* suggests that the term 'ocean grey hound,' ordinarily applied in such cases, be changed to 'dachshund.'

THE total number of persons who filed income tax returns is said to have been about 425,000. In comparing this with the total population of the United States, it would appear that 'malefactors of great wealth' are not so numerous after all.

IN an article dealing with a 'Refrigeration Process for the Manufacture of Gasoline from Casing-Head Gas' appearing in the February issue, an error was made in attributing the source of gas supply to the Amalgamated Oil Company. The gas used in the plant of the Olinda Gasoline Company comes from the Santa Fé wells in the Fullerton and Olinda fields.

ON March 12 the President signed the Alaskan Railroad Bill authorizing the expenditure of $35,000,000 for the construction of a Government-owned railroad in Alaska. In addition to the usual provisions, which were discussed more in detail last month, the bill provides for a redemption fund into which shall be paid 75% of the moneys derived from the sale of public lands in Alaska, or of the coal or mineral contents thereof. Machinery utilized in the construction of the Panama canal is made available for construction work. The federal Employers' Liability Law is applicable to the Government as a railroad operator.

AN interesting example of human ingenuity is found in the employment of one of the Panama Canal locks at Gatun as a dry dock. Five of the naval submarines which had been stationed at the Atlantic entrance to the canal were in need of docking. Accordingly, they were placed in one of the Gatun locks and the water pumped out leaving the submarines high and dry and accessible for hull repairs. As the lock chambers are arranged in pairs, one of them could be used without interfering with the passage of vessels through the canal.

GUSHERS are not always an unmixed blessing to the oil operator. This months' frontispiece shows a well on section 28, 31-23 in the Midway field belonging to the Record Oil Company. For a few days after it was brought in it was kept under control. The pressure finally became too great and the oil broke loose, gushing at the rate of 20,000 barrels per day, which amount soon diminished to about 7500 barrels per day as the pressure was relieved. Extraordinary efforts were made to save the oil, and with the coöperation of the neighboring operators comparatively little was lost. The oil is of 27.9 Baumé gravity and is a valuable addition to the supply suitable for refining. At the time the photograph was taken the gushing oil had almost entirely undermined the derrick, which fell two days later. It is interesting to note that the Record well is but a few hundred feet from the Kern Trading and Oil Company's gusher that caught fire and burned furiously for many days.

Generated on 2024-09-30 00:35 GMT / https://hdl.handle.net/2027/uiug.30112007838003
Public Domain, Google-digitized / http://www.hathitrust.org/access_use#pd-google
Digitized by Google
Original from
UNIVERSITY OF ILLINOIS AT
URBANA-CHAMPAIGN

being ultimately extinguished by the method described by Mr. C. P. Bowie in the February number.

SPECIAL interest attaches to the mean temperature difference chart shown on page 256 accompanying Mr. C. F. Braun's article on 'Feed Water Heaters.' The chart is plotted in three variables for the determination of mean temperature difference according to Grashof's formula which contains four variables. This is accomplished by utilizing the fact that the value of the mean temperature difference will not be changed if any constant be deducted from all the temperature values in the equation. By making this constant T_1 the equation is simplified to one of three variables which are plotted on this diagram. To increase the accuracy of range of the diagram, two scales are given. For temperatures between 200° and 1000° the 100 scale should be used.

AS has been expected for some time, the President has asked Congress to repeal the Panama tolls exemption clause in the Panama Canal Bill which was passed during the Taft administration. That strong opposition will be developed in Congress goes without saying, as the question of right and wrong apparently does not enter into the case to the same degree as that of political expediency. The daily press apparently desires to wilfully mislead the general public as to the facts in the case, in an effort to make political capital out of what they appear to regard as a back down due to pressure brought by Great Britain. It appears to be a question as to whether or not the United States Government shall violate provisions of a treaty merely because it has the power to do so and because, due to a misunderstanding of conditions, such a course might prove popular with the masses. Thinking people, however, are of the opinion that if the measure is regarded as a ship subsidy, it is applied in the wrong place and that no nation may lightly disregard treaty obligations on the basis of a technicality.

A CHANGE with respect to oil land titles is proposed. A bill is now pending before the Public Lands Committee in the House of Representatives that aims to settle the question of such titles fundamentally. In general, a system of leasing is to be adopted which in itself will undoubtedly prove in the long run to be very much more satisfactory than the old method which applied the laws governing placer claims to taking up oil lands. Complaint has been made that in the proposed bill no provision has been made for the locators or operators now in possession of proved and unpatented claims. While their rights, when valid, are prior and would doubtless be held good in court, it would seem proper that they should, in terms, be given a preference right to lease in case they care to change their form of holding. The bill is also criticized on the ground that the money from leases should go to the state. Section 28 provides that the royalties and rentals shall go into the Reclamation fund, of which it is to be remembered that 51% must be spent in the state in which it originates, and it is further provided that as the money is returned to the fund 50% must be handed over to the state. The law provides in general that a prospecting permit may be granted to any qualified applicant, conferring upon him an exclusive right for a period not exceeding two years to prospect for oil or natural gas upon not to exceed

Generated on 2024-09-30 00:29 GMT / https://hdl.handle.net/2027/uiug.30112007838003
Public Domain, Google-digitized / http://www.hathitrust.org/access_use#pd-google
Digitized by Google
Original from
UNIVERSITY OF ILLINOIS AT
URBANA-CHAMPAIGN

640 acres of land. When oil shall have been discovered, the permittee shall be entitled to a patent for not exceeding one-quarter of the land embraced in the prospecting permit. After the discovery of oil or natural gas, the Secretary of the Interior, through competitive bidding or some other method, may lease land in areas not exceeding 2560 acres. The lessee is to pay such royalty as may be fixed in the lease, plus a payment in advance of $1 per acre per annum as a rental charge. The leases are to be for a period of ten years with the preferential right in the lessee to renew the lease for a second period of ten years upon terms and conditions to be prescribed by the Secretary of the Interior. The Secretary is authorized to cancel permits of licensees if in his judgment they do not exercise due diligence in the prosecution of prospecting work, or if they shall fail to pay the rental or royalties provided for. With the approval of the Secretary, lessees holding small blocks or areas may consolidate their holdings so as to include in a single holding not to exceed 2560 acres of contiguous lands. In order to prevent consolidation of large holdings in one company, however, it is prescribed that no person, association, or corporation shall be permitted to take or hold any interest as a stockholder, or otherwise, more than one lease of each of the deposits covered by the proposed bill; nor may leases issued under the authority of this act be assigned except with the consent of the Secretary of the Interior. Much of the apprehension caused by this bill seems to be due to the mistaken belief that it applies to the withdrawn lands. As reported to the House of Representatives, these are specifically excepted. Operators on such lands therefore will continue to work under the provisions of the general law and the withdrawal act of 1910 in which ample provision was made for *bona fide* locators who continued diligently at work. However, it is probable that the leasing system will be extended eventually to all oil lands and it is well therefore that the terms of any proposed bill be carefully scrutinized.

Stocks and Bonds

Since the establishment of public service commissions throughout the country with authority over all public utilities, the general public has received a liberal education in present day methods of financing. It seems that the several grades of securities that it has become the habit of financiers to issue, namely common stock, preferred stock, and bonds, are like the eggs, fresh eggs, and ranch eggs generally displayed by shopkeepers at prices of 15 cents, 25 cents, and 35 cents per dozen respectively. The common stock is the mere 'egg' of finance upon which the holder may expect a dividend only after all other obligations are met. It generally constitutes the aqueous element in a corporation and is given away in lieu of a money compensation to promoters and others to whom the company is under obligation. For purposes of manipulation, however, its possession is quite desirable as its voting power is nearly always the same as for the preferred stock.

The preferred stock is the 'fresh egg' of finance. The fortunate possessor has the next right to a share of the earnings after the portion required for amortization and interest on bonds has been provided. There are of course many varieties of preferred stock which may be broadly classed as cumulative and non-cumulative, the

Generated on 2024-09-30 00:40 GMT / https://hdl.handle.net/2027/uiug.30112007838003
Public Domain, Google-digitized / http://www.hathitrust.org/access_use#pd-google
Digitized by Google
Original from UNIVERSITY OF ILLINOIS AT URBANA-CHAMPAIGN

former having a stipulated dividend which accrues during non-productive periods, following such, all back dividends must be paid when the earnings are forthcoming. The bond, however, is the 'ranch egg', the *ne plus ultra* of commercial paper. It not only bears interest at a stipulated rate which must be paid, but is secured by a mortgage on the assets of the company. A company that defaults in its bond interest is in bad condition indeed, this being the last stage before the advent of the sheriff and a sale under the hammer of the auctioneer. The bond holder has usually been regarded as an individual especially favored of fortune, the monotonous prosperity of whose life is only varied by semi-annual excursions to the safe deposit vaults for the purpose of clipping the interest coupons and presenting them at his bankers for payment. The way of many bondholders recently however has been far from rosy. The freedom from responsibility on the part of the bondholder is delightful so long as the company is well and efficiently managed, but when it isn't, it is another story. A bond holder *per se* has no voice in the management of a company and as long as his interest payments are made promptly, must look on as a spectator while the value of the security for his bonds is being seriously injured by inefficient management on the part of those who happen to control the stock. The usual course in company promotions is to give away the common stock for promotion expenses and as a bonus thrown in for good measure when preferred stock or bonds are sold. As a general rule, however, the money realized from the sale of bonds is used for building the project while that realized from the sale of preferred stock covers the cash outlay for preliminary investigations. The common stock is nearly always water only. Thus it appears that the principal investor, namely, the bondholder, does not manage the property in which he has put his money, but is content under the present state of affairs to see the management vested in those whose actual financial interest is very much less than his own. Financiers and investors seem recently to have come into a realization of this fact, especially in Europe, and in many of the more recent company promotions no bond issues are provided. As a substitute for bonds, so-called cumulative preference shares are issued that are somewhat similar to bonds, except that they carry a voting power that gives their possessor a voice in the management. A dividend payment is fixed at a stipulated rate, and if earnings are not immediately forthcoming, accumulates as an obligation which the company must discharge in full before any surplus earnings can be distributed in dividends upon the common stock. In the event of unsuccessful operations and the company going into liquidation, these shares have a preference upon the assets of the company up to the par value of the stock. It would appear that stock of this kind would carry the same security to investors as a bond with the added advantage that its holders would, in a collective sense, manage the company in which they have invested their money. This is as it should be. Management by the actual investor would undoubtedly militate against inside manipulation which has been one of the principal evils of company management by holders of bonus stock. We hope that this idea may take hold in this country and that less water and more real money may be back of the apparent capitalization of the corporation of the future.

Generated on 2024-09-30 00:29 GMT / https://hdl.handle.net/2027/uiug.30112007838003
Public Domain, Google-digitized / http://www.hathitrust.org/access_use#pd-google
Digitized by Google
Original from UNIVERSITY OF ILLINOIS AT URBANA-CHAMPAIGN

REVIEW OF THE MONTH

WAITING for better times is not the most inspiring occupation in the world, nevertheless waiting may be properly designated as the keynote, not only for the month of March but for the eight months that preceded it. Many enterprises more or less speculative in character have been compelled by the stress of the times to admit their insecure financial condition, and more will undoubtedly follow. However, as far as western conditions are concerned, it should be a matter of congratulation that the test of financial stringency should have disclosed so few weaknesses in the business structure. Any speculative enterprise is little other than a wager placed by a group of men on their ability to forecast the future. The penalty for a wrong guess is financial disaster, and a number of western corporations have arrived at the inevitable day of reckoning.

THE attitude of the Government, both national and state, toward so-called 'Big Business' has undoubtedly accelerated matters. The investing public should be glad of a condition of affairs that cannot do other than give greater stability to business enterprise than has ever before been possible. The less gambling and the more investing that we, as a nation do, the better the chance for permanent prosperity and the less chance for the recurrence of periodic panics. This new order of things, embracing as it does many changes from former lines of thought, methods, and ideas as to what constitutes business morality, cannot uproot the old in a month or a year. Just now we are in a transitory state, in a somewhat dazed condition, hoping that the capital operations now being performed upon business may not prove to be an autopsy.

REPORTS of dissatisfaction among the new owners of the General Petroleum Company have received confirmation in a circular recently issued by the Western Ocean Syndicate, Ltd. to the original subscribers of General Pipe-Line Company bonds. The circular states that: "An investigation into the affairs of the General Petroleum Company by representatives of the English syndicate, which had made large advances to the Petroleum Company, revealed the fact that it had recently entered into contracts which are likely to entail large operating losses for the next three years. A reorganization may therefore prove essential to enable the Company to free itself of some of these burdensome contracts, which would probably mean placing a receiver in charge of the property, in which event it might be that the supply of oil to the Pipe-Line Company would be terminated or reduced. It would then become necessary for the Pipe-Line Company to enforce its right of entry upon the lands of the Petroleum company and itself pump oil to deliver to its pipe-line, and from this would result the necessity of creating a prompt market for the oil at Los Angeles and San Pedro end of the line, all of which would mean the development and maintenance of an organization to pump, transport and sell oil. In addition it might be impossible to effect the right of entry upon the land of the

Generated on 2024-09-30 00:30 GMT / https://hdl.handle.net/2027/uiug.30112007838003
Public Domain, Google-digitized / http://www.hathitrust.org/access_use#pd-google
Digitized by Google
Original from
UNIVERSITY OF ILLINOIS AT
URBANA-CHAMPAIGN

Petroleum company without serious expensive litigation."

WHILE this can hardly be regarded as a very alluring prospect to present holders of General Petroleum securities, on the other hand, the object of the circular is apparently to whip them into line in order that the exchange to Western Ocean Syndicate paper may be expedited. That the General Petroleum Company has made some unprofitable contracts for the sale of oil is more than likely. Unfortunately, many other producing companies in California have done the same, a diminishing output in many of the older wells having greatly increased the unit cost of production since the original contracts were made. The General Pipe-Line Company is dependent for its existence upon the continued operation of the General Petroleum Company and a receivership for the latter in order that it might be relieved of its unprofitable contracts would convert the pipe-line into scrap iron. By precipitating such action, however, the Western Ocean Syndicate would jeopardize the security for the large cash advances they have already made, and this they are hardly likely to do. At best the affairs of both the petroleum and pipe-line companies are in a decided muddle that will take both time and careful thought to straighten out.

AN interesting contrast is afforded by a glance at the affairs of the Standard Oil Company. The California company has increased its capital stock from $50,000,000 to $100,000,000, having earned nearly 24% on its former capitalization in 1913. The Standard Oil Company of Indiana has made a record almost as good, while the Standard Oil Company of New York has branched out beyond the limits of the Empire state and is about to undertake the development of extensive land holdings in China. A party of ten drillers has been sent from California with four complete standard tool outfits and two rotaries with which to commence operations. Four test wells are to be started in Tien-tsin and then work will be commenced in Shen-Si, near Yeng-Chang and in Chi-Li near Ching-Teh-Fu, 100 miles northeast of Peking. While details are lacking as to the terms made between the Chinese government and the Standard Oil Company, it is understood that a Chinese-American company is to be formed in which the Chinese government will have a substantial interest and the Standard Oil Company a controlling interest. The capital stock is tentatively placed at $100,000,000 Mexican, of which the Standard Oil interests will have one-half, the Chinese government three-eighths with the privilege of acquiring $7,500,000 additional within two years, the balance of the stock being reserved for private Chinese subscription.

OMNIPOTENT seems the only word adequate to describe the powers of the California Railroad Commission. Some time ago the city of Ukiah entered into an agreement with the Mount Jackson Water and Power Company with respect to rates, the term of the agreement extending from September 25, 1907 to the same day and month, 1918. However, the good people of Ukiah became dissatisfied with the rates and in a complaint to the Commission asked that they be lowered. The Power Company accordingly denied that the Commission had the power to do this, and contended that any interference with the rates as they then

Generated on 2024-09-30 00:41 GMT / https://hdl.handle.net/2027/uiug.30112007838003
Public Domain, Google-digitized / http://www.hathitrust.org/access_use#pd-google
Digitized by Google
Original from UNIVERSITY OF ILLINOIS AT URBANA-CHAMPAIGN

obtained would be equivalent to an unconstitutional abrogation of contract. The Commission nevertheless ordered a reduction of the rates on the ground that special powers were vested in the Commission by the Legislature which has plenary powers over public utilities. The Legislature having delegated these powers to the Commission the latter can do as it pleases, the mere fact that the transfer of these powers took place after the consummation of the contract in question having no bearing on the case, as the power to regulate public utilities has always been vested in the Legislature, the Commission having become the assignee. This seems to be a new form of 'Commission' government.

SOMETIME between February 17 and 25 a serious disaster befell the Los Angeles aqueduct. The entire steel of the 10-ft. diameter Antelope Valley siphon, with the exception of a few hundred feet, collapsed from external atmospheric pressure. The break is said to have been caused by the failure of defective concrete piers under the pipe crossing Antelope Valley creek. The illustrations show both the fallen piers and the form taken by the pipe after collapsing. The Antelope Valley siphon includes 15,597 feet of steel and

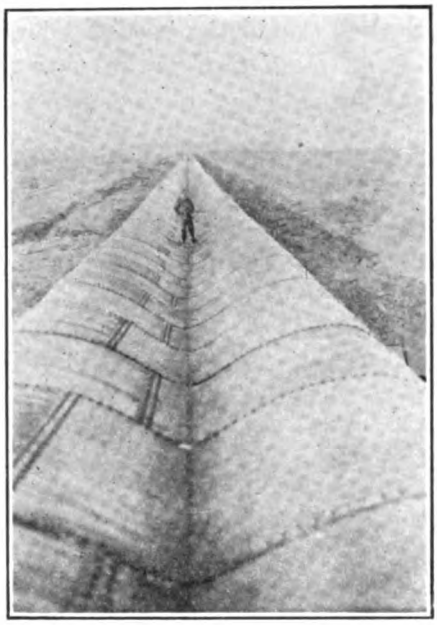

SIPHON AFTER COLLAPSE.

BREAK IN ANTELOPE VALLEY SIPHON, FEBRUARY 25, 1914.

Generated on 2024-09-30 00:29 GMT / https://hdl.handle.net/2027/uiug.30112007838003
Public Domain, Google-digitized / http://www.hathitrust.org/access_use#pd-google
Digitized by Google
Original from
UNIVERSITY OF ILLINOIS AT
URBANA-CHAMPAIGN

6170 feet of concrete. The failure of the piers caused the riveted joints to shear off permitting the water to rush out, thus forming a vacuum in the siphon causing its collapse due to external atmospheric pressure. While it is true that the storms of February in southern California were so severe as to cause Los Angeles and other southern California cities to be cut from the outside world for many days, at the same time, according to Mr. F. C. Finkle to whom we are indebted for the photographs and data herein presented, the excessive rainfall had no especial significance with respect to the failure of the concrete pier. The watershed of Antelope valley above the crossing of the wrecked siphon is of large extent and the creek channel has always been wide at the top, except where it has been filled by the drifting desert sands. Indications on the ground show a comparatively moderate rainfall in the vicinity of the siphon and little water flowed into the creek upstream from the break. The channel where the pipe collapsed was not widened by the storm. Water had not been above the break. Where the break occurred and below that point, the channel is widened due to erosion from the water released by the break. The condition of the concrete piers indicates that they were defective in two particulars, one that they were not given sufficient depth and that the concrete at the lower end of one pier was soft and cracked. To these facts and also that there was not a single air or relief valve on the entire line may be attributed the failure of the siphon.

ACTIVITY among transportation companies is increasing rapidly as the time for the opening of the Panama canal draws near. The Great Northern Railway Company is the latest in the field as is shown by an application presented to the California Board of Harbor Commissioners for suitable wharfage facilities for the ships the Company proposes to place in operation between Astoria, Oregon, and San Francisco. The Company is now constructing two fast steamers for this traffic to compete with the Southern Pacific rail lines between San Francisco and the north. These are twin vessels, each to cost $2,500,000. They are of 12,000 tons displacement and will have a passenger-carrying capacity of 800. Their length is 525 feet with 63-foot beam and 21½-foot draft, the speed requirements being 23 knots per hour. The run from San Francisco to Astoria will require 22 hours. Connection will be made with trains that will make the run between Astoria and Portland in three hours. The time now made by the fastest train between San Francisco and Portland is 25 hours.

OF equal interest is the announcement of the consummation of a traffic agreement between the Atchison, Topeka & Santa Fé railroad system and the Oakland-Antioch & Eastern Railroad. The Santa Fé has long cast wistful eyes at the rich agricultural district in the Sacramento valley, but thus far has been unable to obtain an opening. By means of the agreement just consummated, the Santa Fé company will be in a position to offer through rates to and from eastern points to Sacramento, or any of the points covered by the Northern Electric without reshipping or switching. It is believed that the new arrangement will result in the Santa Fé being a strong competitor for east-bound fruit traffic and that a large icing plant will be built at Sacramento.

Generated on 2024-09-30 00:32 GMT / https://hdl.handle.net/2027/uiug.30112007838003
Public Domain, Google-digitized / http://www.hathitrust.org/access_use#pd-google
Digitized by Google
Original from UNIVERSITY OF ILLINOIS AT URBANA-CHAMPAIGN

Feed-Water Heaters, Closed Type

By C. F. BRAUN *

OF the auxiliary apparatus for a steam power-plant, the most important, next to the condensing equipment, is the feed-water heater. In addition to recovering and returning to the boiler approximately 11% of the total heat generated, thus saving fuel and increasing the steam capacity of the boiler, it also relieves the portions of the boiler near the feed inlet from injurious temperature strains. But it is a fact that engineers give very little attention to the mechanical fitness of this apparatus, and much less to its thermal efficiency. It is the purpose of this article to point out a few of the fundamental principles of design, describe rational ratings, and analyze various mechanical constructions, as an aid to the engineer in making better selections of this important apparatus.

The primary function of a feed-water heater is to continuously transmit heat from steam to water, raising the temperature of the water as nearly as possible to that of the steam.

The factors which effect this transfer of heat are:

1. The temperature difference or head between the steam and the water.
2. The arrangement of heating surfaces.
3. The loss of heat by radiation, conduction, or convection.
4. The coefficient of heat transmission of the dividing surface, which is dependent on

(*a*) The conductivity of the metal used;
(*b*) The condition of the surfaces;
(*c*) The velocity of the water and of the heating surfaces;
(*d*) The design and shape of the heating surfaces.

It has been repeatedly proved by various experimenters that the transfer of heat from a hot fluid to a colder one through metallic surfaces is directly proportional to the difference of temperature existing between them. But in a feed-water heater the temperatures of the fluids are not the same at all parts of the surface, that of the water varying from say 50°F. at entrance to say 207° at exit, and that of the steam from say 212° at entrance to 208°, or even lower, in remote parts of the heater where the steam pressure is reduced.

For purposes of computation, only one value can be used, and it is therefore necessary to determine a mean or average value. For purposes of computing this mean value it is sufficiently accurate to disregard the small variations in the temperature of the steam throughout the heater and to use the entering temperature only. A simple arithmetic mean is not correct, and the formula which has been almost universally adopted and by repeated experiments proved as very accurate is

$$D = \frac{T_2 - T_1}{\log_e \frac{T_S - T_1}{T_S - T_2}}$$

in which

*C. F. Braun & Co., San Francisco.

Generated on 2024-09-30 00:31 GMT / https://hdl.handle.net/2027/uiug.30112007838003
Public Domain, Google-digitized / http://www.hathitrust.org/access_use#pd-google
Digitized by Google
Original from UNIVERSITY OF ILLINOIS AT URBANA-CHAMPAIGN

D = Mean temperature difference.
T_1 = Initial temperature of the water.
T_2 = Final temperature of the water.
T_s = Temperature of the steam.

This formula is somewhat unhandy for frequent use, but the writer has developed a curve chart, Fig. 1, which makes its solution only a matter of direct reading from the chart.

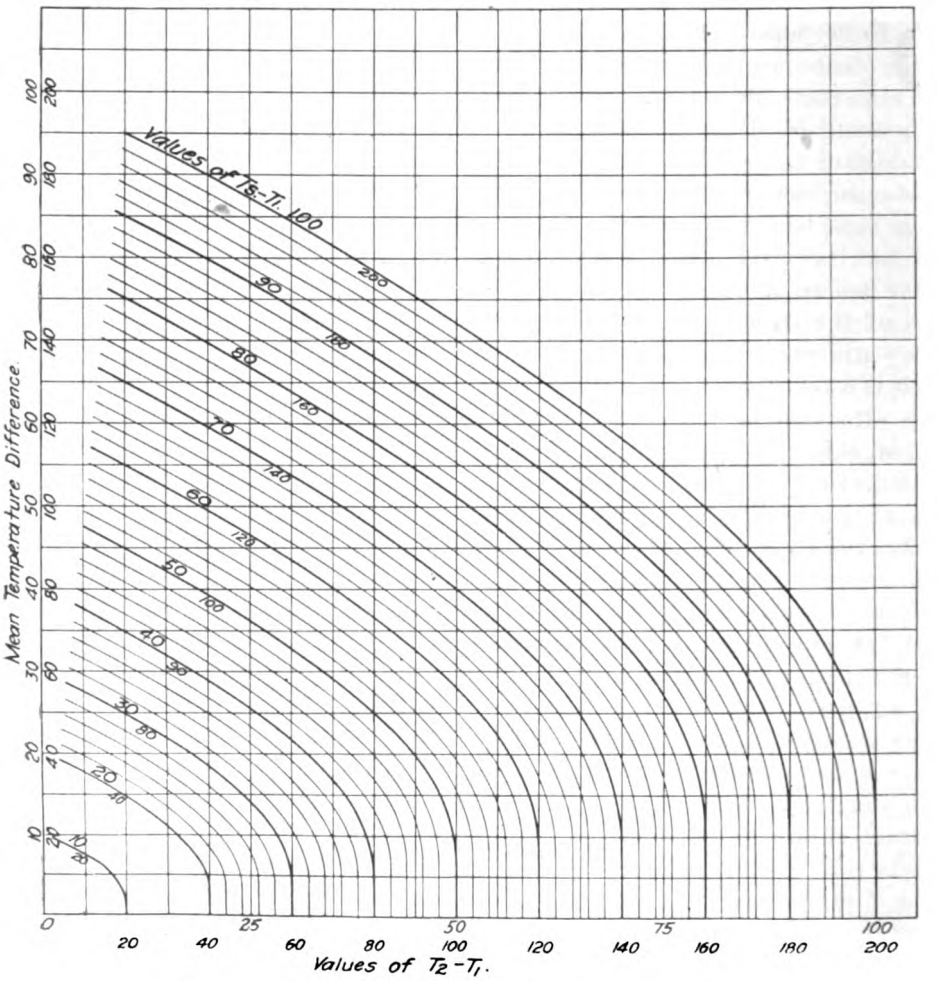

FIG. 1. BRAUN MEAN TEMPERATURE DIFFERENCE CHART.

Since the heat required to raise the temperature of water 1°F. is practically constant at all temperatures, namely, 1 B.t.u., it will be observed that the upper degrees of temperature given to the feed water require relatively much more heater capacity than do the lower degrees. As an example, with steam at a temperature of 212°F. it will require a heater of the same size to raise the temperature of water from 184° to 207° as it would from 50° to 184°, although in the latter case eight times as many heat units are transferred as there are in the former. The explanation lies, of course, in the values of the mean temperature difference, which figures for the former case 15°F. and for the latter 100°F. Ex-

Generated on 2024-09-30 00:35 GMT / https://hdl.handle.net/2027/uiug.30112007838003
Public Domain, Google-digitized / http://www.hathitrust.org/access_use#pd-google
Digitized by Google
Original from UNIVERSITY OF ILLINOIS AT URBANA-CHAMPAIGN

pressing it another way, a heater capable of raising the temperature of a given quantity of water from 50°F. to 207°F. must be twice as large as one required to raise the temperature from 50°F. to 184°F.

Arrangement of Heating Surfaces.—The arrangement of heating surfaces has an important direct effect upon

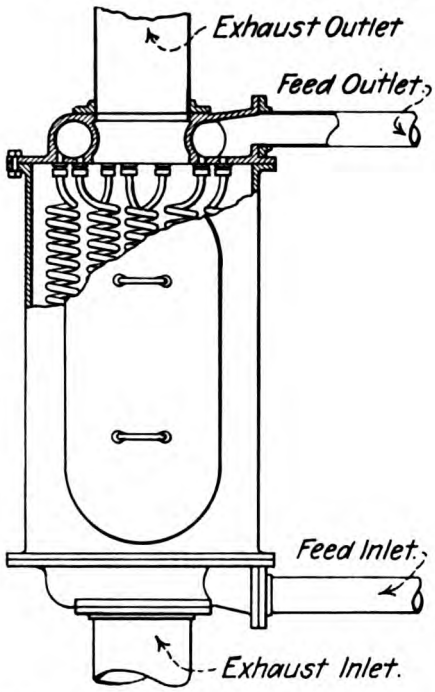

FIG. 2. MULTICOIL HEATER WITH REMOVABLE TUBES.

the transfer of heat, for an incorrect spacing of the various parts may cause serious reductions in steam pressure with corresponding reductions in temperatures in parts of the heater remote from the steam inlet. It has also important indirect effects by influencing the mean temperature difference, the coefficient of heat transmission, and the losses by radiation.

It may also produce a condition undesirable for the operation of other apparatus in the plant, that is, back pressure on the exhaust.

Loss of Heat by Radiation.—A metal feed water heater containing steam and water at a temperature considerably above that of the surrounding air constitutes an excellent radiator. This radiation is objectionable because heat units are wasted which may often be used profitably otherwise, and also because it results in uncomfortable engine or boiler room temperatures.

Coefficient of Heat Transmission.—The coefficient of heat transmission is that figure which represents the number of heat units (B.t.u.) which will pass in unit time (1 hour), through unit area of surface (1 sq. ft.), per unit difference of temperature or temperature head (1°F.), from a warmer fluid to a colder one. A knowledge of the value of this coefficient is absolutely necessary for the computation of heating surfaces, and the many experiments which have been made, while showing wide variations in magnitude, have nevertheless clearly demonstrated the determining factors together with their approximate degree of effect.

Conductivity of Metal Surface.—Certain metals are much better conductors of heat than others, copper standing at the head among those commercially available. Regardless of the material of the heating surface, this conductivity rapidly decreases with increase in the thickness of the metal.

Condition of Surface.—Nearly all natural waters contain chemicals such as lime in solution, or sand, clay, organics, and other matters in mechanical suspension, and in power plants the steam and water may contain considerable quantities of oil. These all tend to adhere to and bake on the hot surfaces causing the formation of coatings which greatly retard heat transmission. Even very thin coatings may

Generated on 2024-09-30 00:30 GMT / https://hdl.handle.net/2027/uiug.30112007838003
Public Domain, Google-digitized / http://www.hathitrust.org/access_use#pd-google
Digitized by Google
Original from UNIVERSITY OF ILLINOIS AT URBANA-CHAMPAIGN

reduce the coefficient by one-half.

Velocity of Flow.—The transfer of heat through any type of surface is very largely dependent on the velocity of flow, the flow varying within certain limits approximately directly as the velocity. This is explained as follows: Water itself is a very poor conductor of heat; that is, it has a low conductivity, so that the particles of water in contact with the heating surfaces at any instant will transmit very little heat to other particles next to them. Heating is really accomplished by continually removing the heated particles from the surface and bringing new ones to take their places. And the higher the velocity the more rapid is this exchange of particles, although it is possible that there is a critical velocity beyond which this relation does not hold.

Design and Shape of the Surface.—The rapid removal of heated particles of water from the hot surfaces and then replacing by cooler ones, is dependent largely on the design and shape of the heating surfaces. Small passages, and passages of irregular shape result in high surface velocities and increase this transference of particles.

The design of heating surfaces has also minor indirect effects on the coefficient of heat transmission through the variations in thickness of metal, surfaces, condition of surfaces, and velocities of flow. Having considered the various factors which influence the transfer of heat, we will analyze a few typical commercial constructions with regard to heat transfer, commercial practicability, mechanical fitness, reliability, ease of cleaning, and life.

Types.—For manifest reasons of economical construction, practically all heaters consist of a cylindrical shell containing coils or other arrangement of round tubing. Either the steam or the water may be passed through the tubes, the other substance being on the outside and in contact with the walls of the shell; and depending on this arrangement, heaters naturally divide into two general classes of steam tube or of water tube, taking the name of the fluid within the coils or tubes.

Heaters of the steam tube type have long ago been proved theoretically and practically inferior to the water tube type, and do not have any place in this

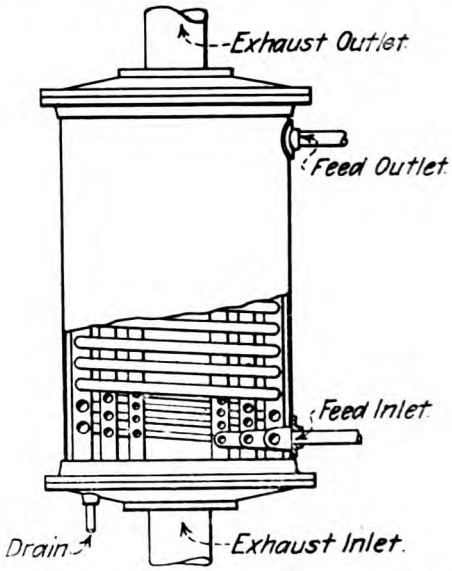

FIG. 3. MULTICOIL HEATER WITH IRON REMOVABLE TUBES.

discussion. But in order to point out clearly the various objections, Fig. 6, showing a common type, is presented for consideration. The most serious difficulty is that the water being in a large body, has an exceedingly low velocity of flow, the only circulation being a sluggish movement due to the rise of hot water to the top by reason of its lower specific gravity.

It is also very difficult to produce a free circulation of steam, quick removal of air, and thorough drainage of condensation from the small coils or

Generated on 2024-09-30 00:29 GMT / https://hdl.handle.net/2027/uiug.30112007838003
Public Domain, Google-digitized / http://www.hathitrust.org/access_use#pd-google
Digitized by Google
Original from UNIVERSITY OF ILLINOIS AT URBANA-CHAMPAIGN

tubes. The pressure, and consequently the temperature of the steam, will fall very materially toward the end of the coils. For the above reasons, the coefficient of heat transmission is very low, ranging from 150 in poorly designed apparatus to 350 in the best types, or about one-half of that in a well designed water tube heater.

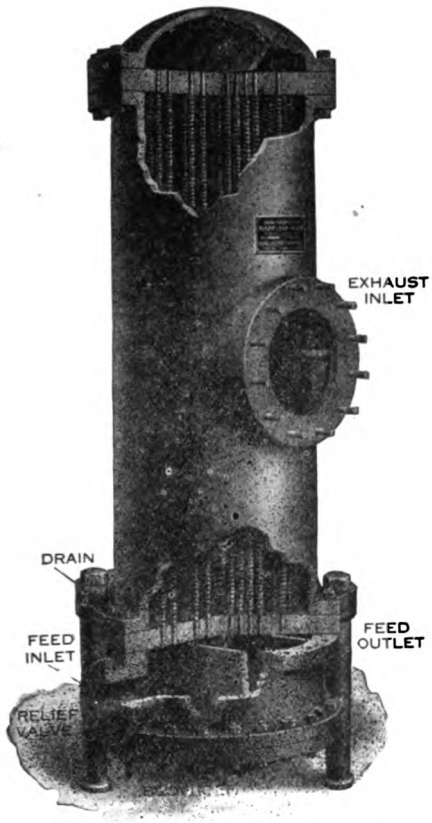

FIG. 4. CORRUGATED TUBE HEATER.

And if the water contains scale-forming solids, these will on account of the low water velocity deposit readily on the outside of the tubes (an inaccessible place for cleaning), and further reduce the heat transmission.

The next serious objection to this type of heater is that it will not permit of high exit temperatures because the hottest water is continually being intermingled with currents of cooler water. And finally the shell is under water pressure (boiler pressure plus pipe friction) amounting often to 250 lb. per square inch. This leads to the use of steel for shells instead of cast iron, on account of its much greater tensile strength. Steel is not desirable for heater work for it is attacked and rapidly damaged by the gases driven off from even distilled water at a temperature of about 180°F. A steam tube heater, it therefore appears, does not fulfill one of the requisites of good design as well as a water tube heater and they are therefore used only where storage is required and even for this service the writer considers a water tube heater and independent storage tank superior.

Having now eliminated the steam tube heater we will consider various ways of increasing the heat transfer factors in water tube heaters. Of these factors, the mean temperature difference can be affected only by the arrangement of heating surfaces. For maximum mean temperature difference the surfaces must be arranged so as to give counter current flow, that is, the steam is passed through the heater in an opposite direction to that of the water, the hot water leaving where the steam is hottest.

It can be seen at once that by this arrangement the highest final water temperature can be obtained, and it can readily be proved mathematically that with any given set of temperature values a greater mean temperature difference may be obtained than is possible with parallel current apparatus. For the above reasons, heating apparatus should always be constructed on the counter current principle, and never with parallel currents.

Fig. 2 and 3 show modern well known types of heaters in which this

Generated on 2024-09-30 00:37 GMT / https://hdl.handle.net/2027/uiug.30112007838003
Public Domain, Google-digitized / http://www.hathitrust.org/access_use#pd-google
Digitized by Google
Original from UNIVERSITY OF ILLINOIS AT URBANA-CHAMPAIGN

principle is neglected entirely and which therefore cannot possibly give high feed temperatures unless a large excess quantity of exhaust steam is passed through the heater. Heaters Fig. 4 and 5 have this principle correctly carried out.

Arrangement of Heating Surface.—The next requisite to good design is proper arrangement of heating surface so as to give unhampered distribution of steam throughout the heater. For economical manufacture it is desirable to have as much heating surface in a given size shell as possible. This at once calls for the use of straight tubes of as small diameter as practical and arranged close to one another. A coil heater is the most objectionable as regards this feature.

From a heat transfer point of view, this close spacing is desirable for it causes the steam to flow with considerable velocity over the tubes. But if some provision is not made for distribution of steam, this close spacing of tubes will prevent the entry of steam to all parts of the heater and only those tubes directly in front of the exhaust opening will be operating efficiently. The surface should therefore be arranged with free spaces leading to those parts of the heater away from the entrance; such an arrangement can be seen on the heater shown in Fig. 4 but is absolutely neglected in those shown in Fig. 4 and 5.

COEFFICIENT OF HEAT TRANSMISSION

Conductivity of Metals.—The first item to look to in an effort to increase the heat coefficient is the material for the heating surfaces. As we have seen, copper has the highest conductivity of metals commercially available for this purpose. And in addition to this, pure copper is not attacked and corroded by minerals in the water or by electrolysis so that comparatively thin walls can be used.

Condition of Surface.—Practically any type of heating surface will eventually become coated with impurities in the water and for this reason the heating surface should invariably be arranged for easy cleaning. This at once eliminates from consideration any bent or coiled tubes and the writer has actually seen heaters similar to

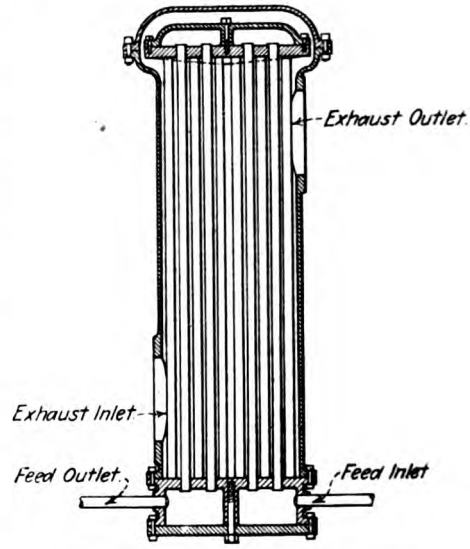

FIG. 5. FLOATING HEAD HEATER.

Fig. 3, 6, and 7, which had been discarded owing to the fact that they had become clogged with scale which it was impossible to remove. It is as foolish to use coiled tube heaters as it would be to use coiled tube boilers.

And even many straight tube heaters are constructed so that it is very difficult to expose the ends of the tubes for inserting a cleaning tool. Heater Fig. 7 has large piping connections in the heads which must be disconnected and removed before cleaning can be accomplished. Heaters Fig. 4 and 5 are constructed properly so that the heater heads may be removed and tube ends exposed without the disconnection

Generated on 2024-09-30 00:30 GMT / https://hdl.handle.net/2027/uiug.30112007838003
Public Domain, Google-digitized / http://www.hathitrust.org/access_use#pd-google
Digitized by Google
Original from UNIVERSITY OF ILLINOIS AT URBANA-CHAMPAIGN

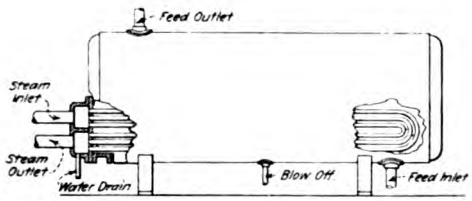

FIG. 6. STEAM TUBE STORAGE HEATER.

of any piping. The deposit of scale may be greatly decreased by having a high water velocity through the heater, and this fact alone warrants the use of small tubes and several passes of the water, and is in fact a much more important consideration than is generally thought. Further, any tube which agitates the water passing through it produces a sort of scouring action which prevents deposits from adhering. Fig. 10 is taken from a photograph of a tube which is a remarkable and convincing exhibit of this fact. The tube was taken from a heater which had been in service for a number of years, and this tube together with the other tubes of the heater showed a heavy coating of scale on the straight portion of the tube but none whatever on the corrugated portions.

Velocity of Flow.—The most important factor affecting the coefficient of heat transmission is the velocity of flow through the heater, for within certain limits the coefficient increases almost directly as the square of the velocity. High velocity is obtained by the use of small tubes, and by causing the water to pass successively through groups of tubes by means of baffling portions in the water spaces. The increase in the coefficient by velocity is due to the rapid removal from the heating surface of heated particles of water and their replacement with colder ones. But even with high velocities there is a tendency for the particles of water near the heating surface to remain there, and a colder core of water be maintained in the centre of the tube, for water is an excellent non-conductor of heat. It is, therefore, essential to construct the surface so as to cause a continual mixing of the water.

One of the methods employed is to coil the tube, as in Fig. 2. But this has very little effect, producing only a slow turning motion of the water and increasing the coefficient by probably not more than 3 or 4%. And the coiled tube is most objectionable because it cannot be cleaned, and because it occupies too much space in a shell. Another method which has been adopted is to use a double tube construction by means of which a thin film of water is maintained and heat applied to both sides. This method produces very effective results, but the construction is not a simple one, the tubes are difficult to clean, and the actual efficiency of the inner steam tube is so low as not to warrant its cost.

Another method much in use (Fig. 8) is to place in the tube a spiral baffle usually of wire on account of convenience, by means of which the flow of water is broken and the movement of

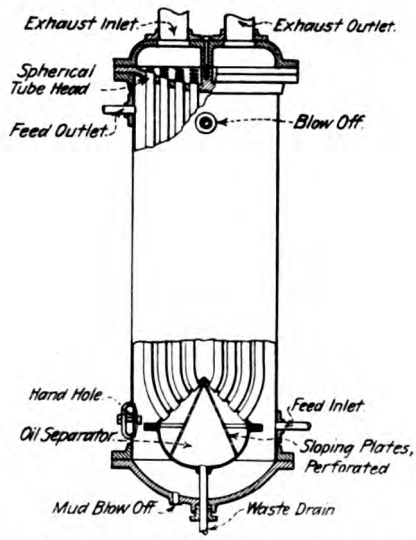

FIG. 7. STEAM TUBE HEATER WITHOUT STORAGE.

Generated on 2024-09-30 00:33 GMT / https://hdl.handle.net/2027/uiug.30112007838003
Public Domain, Google-digitized / http://www.hathitrust.org/access_use#pd-google
Digitized by Google
Original from UNIVERSITY OF ILLINOIS AT URBANA-CHAMPAIGN

particles over the heating surface greatly increased. This arrangement increases the coefficient of heat transmission by about 20% over that of a straight tube. This is a very simple and effective device, the only objection being the necessity for removing and replacing the baffle wire when cleaning.

Perhaps the most effective method which has been devised is the corrugated tube (Fig. 9.) This tube, made usually of copper on account of its ductility, is constructed with a slight spiral corrugation throughout its entire length so that the water is given a twisting, tumbling motion with consequent rapid movement of particles over the surface. As might be expected this tube increases the coefficient of heat transmission by about 50% over that of a straight tube. The tube is not expensive to manufacture, is straight and can therefore be easily cleaned with a tube cleaner, and in addition is capable of accommodating expansion, which no other straight tube can do.

There is available much experimental data showing the effects of velocity, size, material, and type of tube and on the coefficient of heat transmission, the discussion of which is beyond the scope of this article. However, a few guiding figures will be given.

In well designed apparatus having small tubes, and so proportioned as to give proper steam and water velocities, the following heat transmission should be obtained:

Kind of heating surface.	Coefficient heat transmission B.t.u. per sq. ft. per degree diff. per hour.
Standard iron pipe, unfinished	300
Brass condenser tubing	550
Brass condenser tubing with spiral	660
Corrugated copper tubing	825

For safe commercial design and to allow for coating of the surfaces these figures should be decreased by say from 20 to 30%. With incorrect velocities, large tubes, or improper steam distribution, these figures may easily be reduced by one-half.

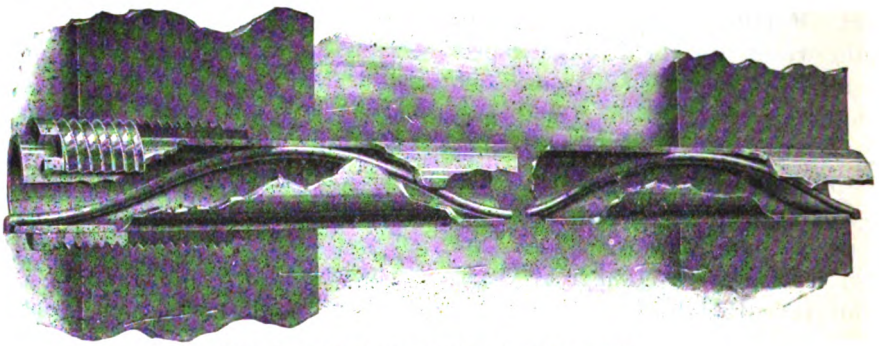

FIG. 8. SPIRALLY BAFFLED HEATER TUBE.

Since a heater is a machine without moving parts it will, if constructed properly, require practically no attention. But owing to the difference of temperatures to which the various metal parts of the heater are subjected, it is necessary to provide means for compensating for the differences in expansion of tube parts. Probably the most common method is to use straight tubes securing them in the heads by means of packings and ferrules (Fig. 11). The tubes can thus

Generated on 2024-09-30 00:29 GMT / https://hdl.handle.net/2027/uiug.30112007838003
Public Domain, Google-digitized / http://www.hathitrust.org/access_use#pd-google
Digitized by Google
Original from UNIVERSITY OF ILLINOIS AT URBANA-CHAMPAIGN

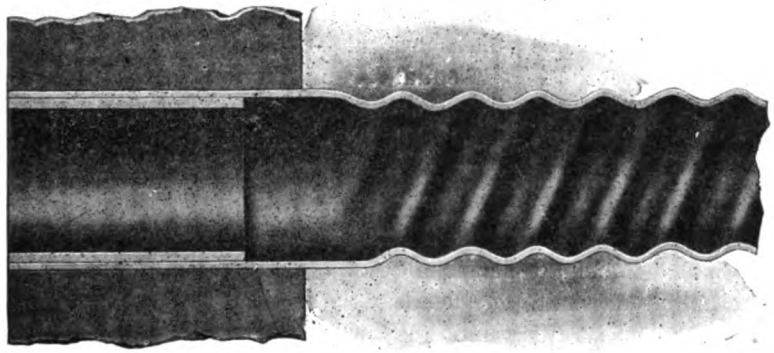

FIG. 9. CORRUGATED TUBE.

expand in either direction independently of the shell. But this introduces a perishable part, namely, the packing, which will eventually leak and require attention or replacing. Furthermore if not exactly the proper length the tubes may 'crawl', expose the packing, and cause leaks.

A very important improvement on this method is the expanding of the tube rigidly in one head Fig. 8, thus eliminating one-half of the packings and preventing the objectionable 'crawling.' The coiled tube (Fig. 2) will, of course, accommodate any expansion strains but in order to have it removable for replacing, it is constructed with unions at each end. This introduces a perishable part and one which may also jar loose due to vibrations of a ship, engine, or pulsations of the boiler feed pump. These objections coupled with the fact that it cannot be properly cleaned, make the coiled tube the least desirable of all.

The U tube is used to some extent and will properly accommodate expansion, but it cannot be cleaned, is difficult to remove, and occupies more space than a straight tube. Another method which has been extensively used is the diaphragm head. This accommodates the expansion satisfactorily, but due to the unequal stresses the diaphragm head itself is almost sure to crack before having been in service

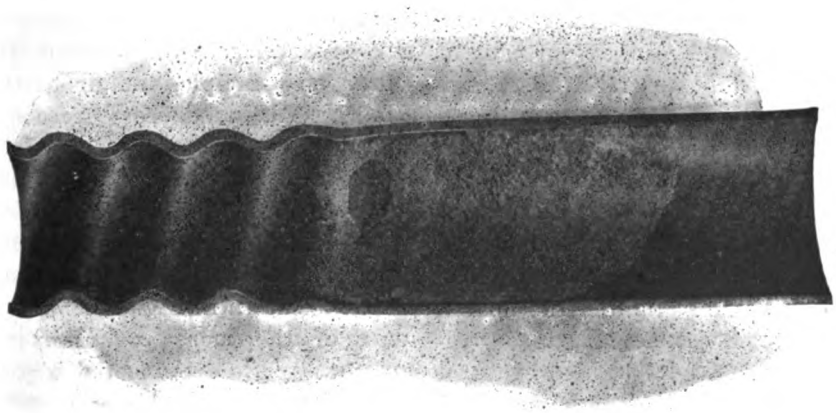

FIG. 10. CORRUGATED TUBE SCALING EFFECT.

Generated on 2024-09-30 00:28 GMT / https://hdl.handle.net/2027/uiug.30112007838003
Public Domain, Google-digitized / http://www.hathitrust.org/access_use#pd-google
Digitized by Google
Original from
UNIVERSITY OF ILLINOIS AT
URBANA-CHAMPAIGN

long. But they frequently break due to feed pump pulsations and are furthermore subject to unequal temperature stresses.

The corrugated copper tube (Fig. 9) can be rigidly expanded into both heads, for each individual tube will by reason of the corrugations accommodate expansions. Thus all perishable parts are eliminated, shell and heads are protected from strains, and the tubes being straight can be readily cleaned.

General Structural Features.—The heater should always be constructed

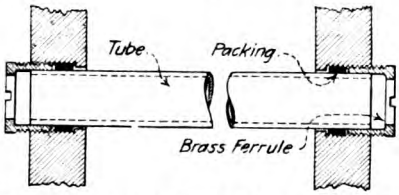

FIG. 11. STRAIGHT HEATER TUBE WITH PACKING GLAND.

with the tube head a separate casting from the heater body (Fig. 4), so that in case of cracking it can be easily replaced. The water passages and heads should also consist of separate castings so that renewals do not involve practically the whole heater.

Materials.—For heating surface a metal is required having a high conductivity for heat. The metal must also be resistant to corrosive attacks of chemicals in the water. Copper fulfills both of these requirements, being far superior to iron or steel which pit or corrode rapidly. Heater shells should invariably be constructed of cast iron for it is not subject to pitting and will last almost indefinitely. Steel shells may possibly lighten the heater, but they are subject to very rapid corrosion and should be avoided even for marine service.

Piping.—The general method of arrangement of feed water heater piping connections has been and remains today, with few exceptions, fundamentally wrong. The writer refers to the thoroughfare method (Fig. 12) in which the heater is placed in the exhaust header and all exhaust steam passed through the heater, excepting, of course, that which is condensed in the heater. In non-condensing plants the total exhaust steam is about 10 times as much as is required by the feed water heaters, and in condensing plants often 1½ to 2 times as much. Thus the piping to the heater and the heater shell itself must be large enough to accommodate the maximum total exhaust of the power plant.

Usually this piping is installed too small and the heater passages not designed for passing large quantities of steam, and the result is an excessive back pressure on the various steam units. Furthermore this large quantity of steam passing at high velocity through the heater often causes the tubes to chatter and consequently crack off, and if there is oil in the exhaust the tubes will foul quickly. If a by-pass is provided to permit of cutting the heater out for cleaning, a number of heavy fittings and three valves are required, all the size of the main exhaust.

All these difficulties may be obviated by connecting the heater on the 'induction' principle, similar to the way in which all condensers are connected, so that the heater will condense all steam entering it and draw more as required, the main body of the exhaust passing to atmosphere without passing through the heater. This arrangement is shown in Fig. 13 as adopted by one of the more progressive manufacturers. So deep rooted was the old 'thoroughfare' principle in the minds of engineers, that blanking off one of the openings in their old pattern was

Generated on 2024-09-30 00:28 GMT / https://hdl.handle.net/2027/uiug.30112007838003
Public Domain, Google-digitized / http://www.hathitrust.org/access_use#pd-google
Digitized by Google
Original from UNIVERSITY OF ILLINOIS AT URBANA-CHAMPAIGN

not sufficient, and they had finally to change their patterns to have only one opening.

This induction principle of piping makes possible smaller piping to the heater, a more convenient location of the heater (not necessary in main exhaust) the isolation of the heater by one valve, and protection of tubes from

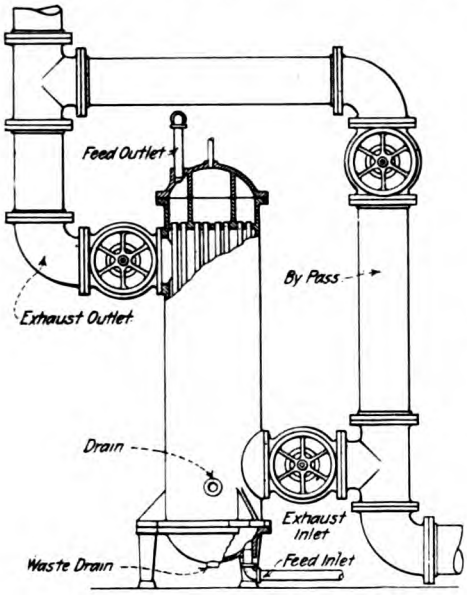

FIG. 12. HEATER WITH 'THOROUGHFARE' PIPING.

dirt and 'chattering.' Precaution should be taken to place the heater branch in the line of flow (Fig. 13) and no back pressure valve is then necessary.

The exhaust connection should be near the centre of the shell to give even distribution throughout the shell, there should be blow-off connections in each pass, there should be a drain connection to trap at the lowest part of the steam space, there should be liberal air vent connections to prevent the heater from becoming air bound and above all there should be no piping connections in the heads to interfere with cleaning.

Ratings.—The feed water heater like much other apparatus is subject to irrational and meaningless ratings, namely, by horse-power. This presumably refers to boiler horse-power usually taken as the evaporation of 30 lb. water per hour, so that a 1-hp. heater would be one capable of heating water at the rate of 30 lb. per hour. But the writer has known unscrupulous venders of heaters, who when shown that the performance of their heaters did not come up to guarantees gave the excuse that they in rating meant engine horse-power, which, of course, means nothing and may range from say 10 lb. to 75 lb. per hour.

Even if the quantity is fixed at 30 lb. per hour there are still the temperatures which are not considered in the horse-power rating. As the temperature of the water entering the heater may be anywhere from 32°F. to say 110°F. and as the temperature of the water leaving may be anything above this depending on the capacity of the heater, it is obvious that the horse-power rating has no definite meaning whatever and it is true that many heaters do not produce a final water temperature of over 160°, whereas it should be nearly the temperature of the exhaust steam, or not less than say 207°F. in any case.

Some engineers recognizing the insufficiency of the horse-power rating have adopted the method of specifying the square feet of heating surface. This, of course, is more satisfactory than the horse-power rating, for if the engineer is careful to select a good heater he will, with sufficient heating surface, obtain results. If he should select a parallel current heater, that is, one in which the feed water leaves the heater on the side away from the exhaust inlet, he could not with any amount of surface obtain a high temperature without a great excess of steam.

Generated on 2024-09-30 00:36 GMT / https://hdl.handle.net/2027/uiug.30112007838003
Public Domain, Google-digitized / http://www.hathitrust.org/access_use#pd-google
Digitized by Google
Original from UNIVERSITY OF ILLINOIS AT URBANA-CHAMPAIGN

As a competitive basis the square feet of heating surface is not in any way fair. The design and general arrangement of the heaters may cause a variation in heat transmission of 200 or 300% and, as has been described above, the use of special types of heating surface such as spiral flow, or corrugated tubing, will increase the heat transmission 20 to 40%. The establishment by purchasers of the square feet of heating surface as the competitive basis only discourages any improvements in design and secures for him a shell with some tubes in it, which may or may not be a feed water heater.

The only practical, rational way to rate a feed water heater is according to its requirements, namely, to raise the temperature of a given quantity of water from some known initial temperature to as near that of the exhaust steam as is practicable. It has been found by experience that with a properly designed feed water heater the feed water can be delivered at a temperature not less than 5° below that of the exhaust steam, and without excessive heating surface, say ⅓ to ¼ sq. ft. per 30 lb. water per hour. This, then, is what the engineer should demand and not be satisfied with some lesser temperature, but the writer's observations are that in about one installation in fifty does the feed water temperature reach the 5° difference.

Let us assume that the total evaporation of the boiler is 30,000 lb. per hour and that the temperature of the feed water supply is 50°F., which is an average figure; specifications for a feed water heater for these conditions should require that the heater be capable of raising the temperature of water from 50°F. to not less than 207°F. at the rate of 30,000 lb. per hour when supplied with all exhaust steam that the heater will condense at atmospheric pressure, corresponding to a temperature of 212°.

The last clause is a very important one, otherwise unscrupulous bidders will guarantee a final water temperature of 207° or higher and if test is made will demand a back pressure of several pounds. The writer had personal experience with just such an instance. Of course, if there is a back

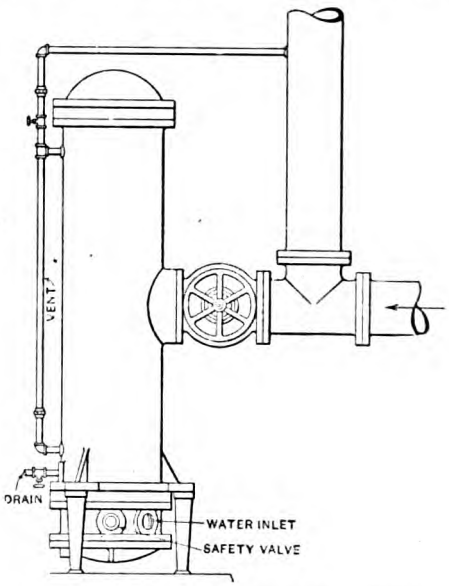

FIG. 13. HEATER WITH INDUCTION PIPING.

pressure with correspondingly increased steam temperature, the final temperature of the water should be correspondingly higher, in fact, not more than 5° below the steam temperature.

Of course any heater must be supplied with sufficient steam to furnish the heat for the water, but as there are available for heating the water about 1000 B.t.u. per pound steam, each pound will heat say 10 lb. water 100°F. As the steam consumption of auxiliaries about a plant is seldom less than 15% of the total this alone will, in nearly all cases, furnish an ample supply for the heater.

Generated on 2024-09-30 00:28 GMT / https://hdl.handle.net/2027/uiug.30112007838003
Public Domain, Google-digitized / http://www.hathitrust.org/access_use#pd-google
Digitized by Google
Original from UNIVERSITY OF ILLINOIS AT URBANA-CHAMPAIGN

Seaport Studies*

By CHARLES EVAN FOWLER†

SEATTLE has had expended or authorized upon its harbor approximately the following sums:

West Seattle water front	$ 500,000
East and West waterways	4,500,000
Duwamish project	1,500,000
C., M. & P. S. Ry. terminals	800,000
Seattle central harbor front	2,750,000
Great Northern docks	1,200,000
Lake Washington canal	3,750,000
Port Commission	
Smith's Cove project	1,000,000
East Waterway project	850,000
Salmon Bay project	350,000
Central Waterfront project	750,000
East Waterway terminal	3,000,000
Ferry boats	350,000
Grand total	$21,300,000

The West Seattle improvements are mostly of a temporary character and will doubtless in the near future give place to more permanent construction, as is fitting for one of the best portions of Elliott bay.

The East and West waterways have been created under a contract with the state for filling the adjacent tide lands, and the dredging is practically completed in both the channels to a depth of 38 ft. at low tide, with a length of about 4000 ft. and a width of 1000 ft. at low-water mark.

The Duwamish project, on which dredging was begun in October 1913, contemplates the straightening, widening, and deepening of the Duwamish river so as to create a ship channel connecting with the West waterway, affording additional dock room adjacent to factory sites and railway lines in the Duwamish valley.

The Chicago, Milwaukee & Puget Sound Railway Company has built one large slip with wharves and warehouses and car ferry slip at the south end of the East waterway, and this is by far the most extensive and modern of any ocean terminal in Seattle harbor.

The Seattle central water front, immediately adjacent to the business centre of the city, is built up with docks of the type mentioned above as having been constructed by the Northern Pacific railway, and affords fairly adequate facilities for handling the business of the Sound steamers, the Alaska fleet, and the Pacific Coast vessels. While many of these docks are used by ocean steamers of large size, they are too short and not fully fitted for such purposes. Few of them have any freight handling machinery at all, with the exception of one steel crane on Pier No. 2, some freight-handling machinery on Pacific Coast company's Pier D, and electric conveyors for sacked grain.

The Great Northern docks at Smith cove have warehouses on one side of the slip and a grain elevator on the other. The slip is dredged out to a depth of 34 ft. at low tide, and affords good accommodation for the Japanese line and the Minnesota, one of the largest of the world's freight steamers. No modern freight handling machinery

*Advance pages from *University Extension Journal*, University of Washington.
†Consulting Engineer, Central Bdg., Seattle, Wash.

Generated on 2024-09-30 00:37 GMT / https://hdl.handle.net/2027/uiug.30112007838003
Public Domain, Google-digitized / http://www.hathitrust.org/access_use#pd-google
Digitized by Google
Original from UNIVERSITY OF ILLINOIS AT URBANA-CHAMPAIGN

is provided, and practically all the freight has to be handled by the cargo booms of the vessels discharging and loading at the docks.

The Lake Washington canal is planned to extend from deep water on Shilshole bay to deep water in Lake Washington, passing through Lake Union. Quite extensive work has been done on the project during the last ten years, and a channel has been dredged out from Shilshole bay for a distance of about 9000 ft., nearly to the head of Salmon bay. From the head of Salmon bay to Lake Union the channel is being excavated, and recently the larger channel has been completed between Lake Union and Lake Washington. With the recent amount authorized by the King County bond issue and the $2,250,000 appropriated by the United States government for a lock (which is next to the size to those at Panama and now nearing completion) it is expected that work will proceed without further serious delay toward the completion of the canal.

The port commission created under the act of 1910 (drawn by the commission of which the writer was a member), of which Gen. H. M. Chittenden is president and Paul P. Whitham is chief engineer, has under way all of the work referred to in the list given above. These projects will all be completed early in 1914, except the East Waterway terminal project, which will likely be completed in 1915.

The Smith's Cove pier will be 310 ft. wide, and ½ mile in length; the east side of the East waterway will have three large ocean docks and a cold storage plant, while on the west side will be a mile-long quay wall, with railroad yards and warehouses back of it; Salmon Bay project will consist of docks for fishing fleet; and the central waterfront project will consist of a quay wharf with 1200 ft. of frontage, and a cold storage warehouse with a capacity of 2000 cars of freight.

These, together with existing wharves and docks, will give Seattle the largest facilities of any city of the size in the world, and as good in character as are in existence anywhere.

Comparing Puget Sound with other great harbors of the world, it might be considered as only one great harbor, but each city on the sound is creating a harbor of its own on the bays and rivers along its shores and emptying into it. The harbor of Blaine, in the extreme northern part of the state of Washington, is susceptible of being made into an excellent harbor of moderate size. Bellingham has possibilities for a fine harbor on Bellingham bay. Everett has begun the creation of a harbor on its immediate water front and in the mouth of the Snohomish river. Anacortes has deep water along the shore of Fidalgo island sufficient to accommodate the largest ships. Port Townsend has a splendid bay, affording the best anchorage for ships of any part of Puget Sound, although during the stormy months of the year it becomes quite rough. Port Orchard bay affords a fine land-locked harbor, adjacent to the U. S. Navy Yard, and will doubtless be a very important harbor in the future as a location for many manufacturing plants. Tacoma has a splendid harbor on Commencement bay, and has made extensive improvements by dredging out the city waterway and other waterways on the tide flats. Olympia has begun extensive improvements in dredging out the waterways and filling in adjacent tide flats, and will offer good facilities for sawmills and plants of various kinds adjacent to both rail and vessel. The commerce of Puget Sound now exceeds San Francisco, both in tonnage

Generated on 2024-09-30 00:38 GMT / https://hdl.handle.net/2027/uiug.30112007838003
Public Domain, Google-digitized / http://www.hathitrust.org/access_use#pd-google
Digitized by Google
Original from UNIVERSITY OF ILLINOIS AT URBANA-CHAMPAIGN

and in the value of commodities.

Grays harbor, in the southern part of the state of Washington, offers an opportunity for a great harbor by the dredging out of the Chehalis river. Willapa harbor, still farther south, will afford another good harbor when the improvements under way in dredging out the bay and Willapa river are completed. Vancouver, Washington, on the Columbia river, ten miles north of Portland, is a river port with conditions practically identical with those of Portland, Oregon.

The Seattle Harbor Commission collected a large amount of data in regard to various ports throughout the United States and throughout the world, covering port administration, port charges, financial systems, port equipment, including types of sea-walls, docks, and dry docks. The result of these studies was the port bill introduced into the legislature of 1908-9. This was not pressed for passage owing to various matters being in an unprepared state for the carrying out of the provisions. Substantially the same bill was passed by the legislature of 1910-11. The old port bill once on the statute books, passed by a former session, has been repealed by the new bill.

In making an exhaustive study of the subject, three types of ports will be found to exist: First, piers or docks projected out from the shore line, such as are found in most of the ports of the United States. Analogous to these are docks or quays built parallel to the shore line. With both types the vessels lie in the tide or current of the body of water where the barbor has been constructed. The second form of ports is that where the vessels lie in tidal basins and are subjected to the rise and fall of the tide. Many of the European ports are of this type. Wet docks, the third type, consists of basins artificially constructed and approached through locks, so that the vessels discharge and load under a uniform stage of water. Each type has its advantages, although the method of construction depends very largely upon the local conditions to be contended with. These various classes of construction may all be seen on Puget Sound, the first in the piers along the Seattle water front; the second in Salmon bay, or Ballard harbor, previous to the completion of the canal, and the third in the government dry docks at Bremerton, which are special forms of this type. After the completion of Lake Washington canal, Lakes Union and Washington will become basins of the third class.

Port administration is of various types, although it has been found to be universally the case that where one authority has full charge of a port the best results are obtained. This may be either as a department of the city government adjacent to the port, like the Department of Docks and Ferries of New York City, or as a separate organization, such as the port of Portland, having charge of all navigation questions within the port district; or it may be under state control, as in the case of San Francisco harbor, where the State Harbor Commission controls. The other type of control is where various corporations and organizations exercise separate control of various portions of a port. This leads to almost endless trouble and a great lack of uniformity in the carrying out of improvements; to say nothing of the great delay that results in extensive works which must be carried out by the coöperation of various organizations. The conclusion was reached by the Seattle Harbor' Commission that a port district governed by a port commission having authority to regulate all matters and pro-

Generated on 2024-09-30 00:29 GMT / https://hdl.handle.net/2027/uiug.30112007838003
Public Domain, Google-digitized / http://www.hathitrust.org/access_use#pd-google
Digitized by Google
Original from UNIVERSITY OF ILLINOIS AT URBANA-CHAMPAIGN

vide for its own finances, and carry out its own work, would be the most desirable of the several types enumerated.

The question of port charges is a very complicated one, but it may be divided generally into three classes. First, a charge against the ship; second, a charge against the cargo or goods carried upon the vessel; and, third, a charge for rental of the berth for the ship and storage space in the warehouses or freight sheds on the piers.

In London the channel of the river is being deepened by doubling the tonnage dues on the ship for three years. In Antwerp there is no charge against the goods. In Hamburg the Hamburg-

velopment cannot in its early stages be wholly paid out of the charges imposed. It is also recognized as a matter of policy that modern harbor improvement is essential, notwithstanding the above fact, and that the state or the controlling power of the harbor must make up the difference in the cost of maintenance and interest from other sources in the interest of the whole country at large.

A table is appended giving, roughly, the port charges imposed in various ports throughout the world together with the miles of water frontage in various ports and data concerning the freight-handling machinery in the various ports.

PORT—	Ocean Business	Class of Port Bus.	Port Types	Dry Docks	Approx. Channel	Chan'l Depth	Port Authorities	Port Equip. Amt.	Port Equip. Class	Amt. Expd. and Authd.	Ocean Front	City %	Port Chg's. P-Ton
Boston	Ocean Coastwise	Grain and Genl.	Piers	Navy Grav.	Har. Ch.	Dr. 35'	Directors of the Port	Nom.		$9,000,000	20 M		
New York	Oc.-Coast & Riv.	Gr.-Gen.	Piers Tidal Bas.	Navy-Private	Har. Ch.	Dr. 40'	Dept Docks and Fer.	Med.	Cranes-Elev.	$83,000,000	475 M (125 ocean)	10%	½-2c
Phila.	O.-C.;Riv.	Gr.-Gen.	Riv. Piers	Navy, Grav.	Riv. 86 M.	Dr. 25'	Dep. Wh. Docs and Ferrics	Nom		$3,350,000	22 M.	8%	½-1c
Balto.	Oc.Co.	Gr.-Coal	Quays Piers	Private	Bay 150	Dr. 21-40'	Hbr. Com. (City)	Med.	Elev.-Coal Dks.	$7,000,000	18 M.	9%	1-3c
Norfolk	O.-C.-R.	Gr.-Coal	Piers	Navy 2 Priv.	Riv. 25 M.	Dr. 30'	Hbr. Com.	Nom.	Coal Dks.	Nominal	65 M.	Nom	1c
Savannah	Oc.-Co.	Cotton Lumber	Riv. Quays	———	Riv. 20 M.	Dr. 22'	Municipal	Nom.	———	Nominal	5 M.	Nom	10c-$1.50 day
N. Orleans	O.-C.-R.	Cotton Lbr.-Grain	Riv. Quays	Navy Float 4Pri.Flo.	Riv. 100 M.	Dr. 40'	Board Com Port N. Or.	Med	———	$4,250,000	30 M.	97%	2-9c
Galveston	Oc.-Coast	Cotton Grain	Piers Quays	———	Bay	Dr. 25'	CityComrs.	Nom.	———	$3,000,000	7 M.	24%	2½c
San Diego	Coast	Cotton? Lbr.-Gen.	Piers	———	Bay	Dr. 25'	Munic	None	———				¾-2c
L. Angeles	Co.-Oc.	Cotton-Lbr Fruit-Gen.	Quays	———	Hbr.	Dr. 25'	Munic.	None	———	$10,000,000	6 M.		¾-2c
San Fran.	O.-C.-R.	Cotton-Lbr Fruit-Gen.	Piers Qu.-Tid. B.	Navy Grav. Priv. Grav Priv. Flo	Bay	Deep	St. Bd. of Hbr. Com.	Nom.	Dock Cr.	$36,000,000	10 M	97%	¾-2c
Portland	O.-C.-R.	Gr.-Lbr.	Riv. Qu	City Flo Priv. Flo	Riv. 103 M.	Dr. 24'	Port of P.	Nom.	Elev. Convys.	$4,500,000	12 M	Nom	0
Seattle	Oc.-Co. Sound	Grain-Lbr. Cotton Coal	Piers Qu.-Tid B	Navy-2 Grav Priv.-4 Flo.	Sd.120 M.	Deep	Port of S.	Nom.	Elec. Con. Coal B.	$21,600,000	15 M.	Nom	¾-2c
Tacoma	O.-C.-So.	Gr.-Lbr. Gen. Coal	Quays	———	Sd 150 M	Dr 26'	City Com.	Nom.	———		8 M.	Nom	Nom
Bellingham	O.-C.-So.	Lumber	Piers-Qu.	———	Sd. 90 M.	Dr. 26'	Munic.	None	———				
Everett	O.-C.-So.	Gr.-Lbr.	Quays	———	Sd. 90 M.	Dr. 26'	Munic.	None	———				
Olympia	Co.-So.	Lumber	Quays	———	Sd 170 M.	Dr. 18'	Munic.	None	———				
GraysHbr.	O.-C.	Lumber	Quays	———	Hbr.	Dr. 20'	Two Munic.	None	———				
Willapa H	Coast	Lumber	Quays	———	Hbr.	Dr. 20'	Two Munic.	None	———				

American Steamship Co. leases seven piers fully equipped by the port authorities with transit sheds, cranes, etc. The company pays for these privileges:

(1) An annual rental of $325,000 for the space rented.

(2) The regular tonnage dues imposed by the port.

(3) Maintains the leased property in good condition.

It is, however, universally recognized that the maintenance of a port and the interest on the cost of its de-

The financial side of port management is one of the most important, inasmuch as expenditures required for creating a port are of great magnitude. The amount of money represented by modern port development, as ascertained by the Montreal Harbor Commission in 1908, still comparatively true, was as follows:

London	$186,700,000
Liverpool	125,000,000
Manchester ..	90,000,000
Glasgow	40,000,000

Generated on 2024-09-30 00:32 GMT / https://hdl.handle.net/2027/uiug.30112007838003
Public Domain, Google-digitized / http://www.hathitrust.org/access_use#pd-google
Digitized by Google
Original from UNIVERSITY OF ILLINOIS AT URBANA-CHAMPAIGN

Newcastle	80,000,000	
Bristol	30,000,000	
Cardiff	30,000,000	
Antwerp	45,000,000	
Hamburg	100,000,000	
Rotterdam ...	33,000,000	
Marseilles	29,500,000	
Havre	24,000,000	
Montreal	10,000,000	
New York City	83,500,000	
San Francisco	36,000,000	(including 1910)
Portland, approx.	4,500,000	
Seattle	15,000,000	(including 1910)
	21,300,000	(including 1913)
Los Angeles ..	10,000,000	(including 1910)

The most notable thing in regard to the expenditure of the New York system of docks is, that while they have been constructed by the dock department, they have been leased to the various steamship and railroad companies at such rates that the entire improvements carried out have been accomplished without any expense to the city, as the following table (1908) will show:

Administration, dock superintendence, and the Bureau of Accounts	$ 2,244,733.00
Engineering	2,238,170.82
Labor, materials, and supplies for new construction work, contract work and repairs..	24,453,965.50
Acquiring property	11,700,520.24
Total outlay	$50,837,391.56

The revenues received by the department during the same period are:

From ferry leases and franchises	$ 7,919,726.37
From leased wharves and wharfage	44,490,625.45
Total receipts	$52,410,351.82

The port bill prepared by our commission gives the Port Commission authority up to a certain extent to levy taxes and issue bonds for the purpose of creating a harbor. In San Francisco the receipts in the year 1909 to 1910 amounted to $1,092,795.55, and the fixed charges amounted to $384,694.77, thus creating a surplus or net income of $708,100.78, which was available for a new construction, repairs, and sinking fund, and interest on the bond issue. It is assumed that the amount will be nearly double this in 1925.

These figures with reference to New York and San Francisco show that a harbor can be made not only self-supporting, but self-creative.

Many of the types of docks or piers employed in the harbors of the United States are of only temporary character, the cheapest being ordinary untreated piles with timber deck and timber sheds or warehouses. These are subject to very rapid decay and to loss from fire. The depreciation on docks of this character will amount to 12 to 15% per year. Where creosoted piles are used, the depreciation would probably be reduced to from 7 to 10% per year, as piles creosoted with 16 lb. of creosote per cubic foot should last from 15 to 20 years. The wharves constructed at the Puget Sound Navy Yard with creosoted piles spaced 8-ft. centres in both directions, have cost from 80c. to $1 per square foot of floor surface, exclusive of warehouses.

The new Chelsea docks on North river in New York, nine in number, are founded on untreated piles, as no teredos are to be guarded against, with timber deck on which paving is laid, and on which two-story fireproof warehouses have been constructed. The warehouses alone have cost in the neighborhood of 6c. per cubic foot.

The proposed piers at South Brooklyn will be constructed with solid filling between masonry walls throughout the central portion of the pier, supporting fireproof sheds with cantilever arms extended out over wooden piers built alongside of the central solid portion. The piles in this type of pier

Generated on 2024-09-30 00:39 GMT / https://hdl.handle.net/2027/uiug.30112007838003
Public Domain, Google-digitized / http://www.hathitrust.org/access_use#pd-google
Digitized by Google
Original from UNIVERSITY OF ILLINOIS AT URBANA-CHAMPAIGN

will be creosoted on account of the necessity for guarding against the teredo in this part of New York harbor.

The Chelsea piers have a length of about 800 ft. and width of 125 ft., with slips 250 ft. in width. The Bush terminals have piers with a length of over 1300 ft., width of 150 ft., with slips 270 ft. wide. These piers have fireproof warehouses immediately adjoining them upon shore, together with railroad yards and tracks extending to the warehouse and out on to the piers, so that cargoes may be handled direct from rail to vessel and vice versa.

The five new piers constructed at Baltimore have been constructed of oblong cylinders sunk along the outer margin, 25 ft. apart, connected together with steel girders and anchored across the width of the piers, so that reinforced concrete sheet piling has been driven back of these connecting girders, and the central space filled in solid with earth on which to construct the warehouses. The depth of water in the slips is only 24 ft. at low tide, or sufficient to take care of the coastwise vessels entering that port.

Various other types of permanent piers have been constructed founded upon steel cylinders filled with concrete, but in one case, notably at Long Beach, California, where the cylinders had become badly corroded, the concrete filling was so poor that the dock collapsed in the heavy breakers. The Puget Sound Navy Yard has constructed reinforced concrete piers founded upon four reinforced cylindrical columns in each bent, connected together with reinforced girders and stringers carrying a reinforced concrete deck. This type of pier will cost approximately two and one-half times what would be necessary to build a wooden pier upon creosoted piling, such as was previously used at this Navy Yard. Another and larger one is now being built.

Sea-walls are constructed of rubble masonry, ashlar masonry, reinforced concrete, and monolithic concrete. In some of the deeper portions of New York harbor along North river, rubble mounds have been built up to about half the depth and on top of this masonry walls of gravity type constructed. These walls have cost in the neighborhood of $300 per lineal foot. Where walls have been constructed in comparatively shallow water on rock bottom the cost has been, in some cases, under $100 per lineal foot. The maximum cost at West 23rd street was $600 per lineal foot. The average cost for the rock bottom is $254 per lineal foot, on ordinarily hard bottom $129 per lineal foot, and where a relieving platform has been used $109 per lineal foot. The sea-wall constructed in San Francisco bay by the State Harbor Commission has been founded upon piling and the masonry wall has been constructed in sectional coffer-dams. A wall of this type constructed at the Mare Island Navy Yard caused a great deal of trouble when the excavation was made for the new dry-dock immediately behind it, by the water finding its way underneath the base of the wall. An ordinary gravity wall about 50 ft. in height along the Seattle waterfront on the west side of Railroad avenue is estimated to cost in the neighborhood of $150 per lineal foot of monolithic concrete construction. The cost of a reinforced type was found to be in the neighborhood of $100 per lineal foot.

Dry-docks have been constructed at most of the European ports as part of the harbor system. On account of the close proximity of the Puget Sound Navy Yard to Seattle harbor, however, it is doubtful whether any large private

Generated on 2024-09-30 00:41 GMT / https://hdl.handle.net/2027/uiug.30112007838003
Public Domain, Google-digitized / http://www.hathitrust.org/access_use#pd-google
Digitized by Google
Original from UNIVERSITY OF ILLINOIS AT URBANA-CHAMPAIGN

dry-docks will ever be built on Puget Sound, the government making a satisfactory rate for the use of its docks by merchant vessels and shipbuilding plants. The first dock constructed at the Puget Sound Navy Yard was of timber construction and is large enough to dock the *Minnesota*, or ships of that size and type. The new dry-dock now under construction is of sufficient size to take the largest ocean vessels, and is being constructed of concrete with granite facings. A dock similar to the first one would cost in the neighborhood of $1,000,000, while the new dock, of larger size, will cost approximately $2,000,000. Seattle now has four private floating docks. Floating dry-docks have been constructed by the government for use at New Orleans and at Manila of such size as will accommodate the largest battleships. Seattle harbor is supplied with several floating docks of timber construction capable of docking vessels of from 3000 to 10,000 tons. The Port of Portland Commission has a timber floating dry-dock constructed in five sections, so that one section only is required for docking a small vessel, while two or more sections are utilized for larger ships. These sections are of such length and width that one section can be docked on another to effect repairs.

Port equipment is a very essential feature with even the best class of docks and warehouses. While such freight ships as the *Minnesota* and the vessels of the American-Hawaiian line are provided with cargo booms sufficient for fairly economical handling of freight in the ports to which they ply, when these latter ships discharge a load at the Isthmus of Tehuantepec in the ports of Salina Cruz and Puerto Mexico, they are discharged and loaded by means of the cargo booms and two traveling cranes on the dock for each ship as well. Twelve gangs of from 12 to 15 men each are employed, and 12,500 tons of cargo is discharged and 10,000 tons of cargo is loaded into the vessel in a period of 13 days. This is presented merely as an illustration of the necessity for freight-handling devices where economical handling of cargo is desired. On the Great Lakes the ore vessels are loaded with ore at the docks on Lake Superior in a few hours and are discharged at the ports in the vicinity of Cleveland on Lake Erie by means of bridge tramways which cover all hatches of vessels, in from five hours' to one day's time. These same vessels carry coal from Lake Erie to upper lake points and discharge as high as 9000 tons of coal in less than 24 hours. It is only necessary to contrast these results with the slow loading and unloading of vessels where no freight-handling devices are provided, to see the advantage that one port can have over another.

From the table given it will be seen that London docks are provided with upward of 1800 handling cranes; Hamburg with approximately 1000 cranes; Antwerp with approximately 400 handling cranes, all of which are rented to the vessels with fuel and operators at from $4 to $5 per day for the smaller sizes and proportionately for the larger, thus giving these ports a great prestige over others not so equipped. The splendid docks of New York, represented by the Chelsea group, may be later equipped with handling devices for unloading and loading vessels, but are now provided to some extent with telpherage systems for distribution of freight through the warehouses. Many ports are also provided with electric conveyors for handling package freight between the vessel and the dock, similar to those employed on Puget Sound for loading sacked grain.

Generated on 2024-09-30 00:29 GMT / https://hdl.handle.net/2027/uiug.30112007838003
Public Domain, Google-digitized / http://www.hathitrust.org/access_use#pd-google
Digitized by Google
Original from UNIVERSITY OF ILLINOIS AT URBANA-CHAMPAIGN

Comparative Port Data.—As a matter of reference it will be interesting to make a brief résumé of the various ports throughout the world, as a means of comparing their efficiency. Of the principal American ports outside of the United States, Montreal is the best equipped. The St. Lawrence river is peculiarly one of the best rivers in the world for ocean navigation, it being practically uniform in its depth and permanence of its river bed. Approximately $10,000,000 has been expended upon the harbor of Montreal, and the improvements are being carried out upon systematic lines, in accordance with the studies made by the harbor commissioners, so as to take care of the great commerce in the most economical manner.

The port of Vancouver, British Columbia, on the Pacific coast, is the terminus of the Canadian Pacific railway, and the harbor is reached through a narrow channel which is being widened and deepened so as to make its navigation less dangerous. Docks and warehouses have been constructed parallel to the shore and entirely of timber, with no pretense to freight-handling devices of any kind. Projects have been approved for dredging and deepening the entrance channel and for improving the harbor, which are now under way, to accommodate the increased traffic and greater size of vessels that it is proposed to employ. This will also be more necessary on account of the fact that the Canadian Northern will make Vancouver its terminus. The Grand Trunk Pacific has selected Prince Rupert, at the extreme northern end of the western Canadian coast opposite Dixon's Entrance, where the distance to the Orient will be the shortest of any of the Pacific ports. The railroad is not entirely completed across the continent, and only the future can tell to what extent the harbor will be improved and equipped, but large docks are under way and a dry-dock is being constructed.

The ports of the United States may be reviewed by referring to them in order, beginning with Boston as the most northerly port of the Atlantic coast. Boston has a very good harbor, which is now being improved to invite a great ocean traffic. The port will be provided with modern docks and modern equipment.

New York harbor, the greatest one in the United States, has long been handicapped with a crooked and shallow channel by which it was reached from the ocean, but the new Ambrose channel with 40 ft. depth at low tide, following around the Brooklyn shore, will make it more easily accessible for vessels of the largest size, such as the *Lusitania*, the *Mauretania*, and the *Imperator*, and for the great ships that are now building by some of the other lines.

The waterfront was originally granted by the Crown to the colony, but was allowed to pass out of the control of the city, in one way or another, until of late years, when the improvement of the harbor was begun and possession was resumed through purchase and condemnation, so that at the present time, of 445 miles of waterfront, the city owns 48 miles, of which 25 miles is productive or equipped with piers, which provide an effective length, figuring the contour of the docks themselves, of 62 miles of waterfront. Out of 200% of North and East rivers foreign commerce uses 8%, coastwise commerce 14%, railroads 36%, while 62% is devoted to miscellaneous commerce, and the balance is practically unimproved. Six miles of the waterfront has been protected by sea-wall so that the adjacent streets have been made

Generated on 2024-09-30 00:34 GMT / https://hdl.handle.net/2027/uiug.30112007838003
Public Domain, Google-digitized / http://www.hathitrust.org/access_use#pd-google
Digitized by Google
Original from UNIVERSITY OF ILLINOIS AT URBANA-CHAMPAIGN

permanent through the protection from caving afforded by this means.

Philadelphia is one of the principal ports of the Atlantic coast, but has not made such improvements as would attract a great ocean commerce, nor has it provided the necessary modern docks and equipment for the economical handling of freight.

Baltimore has gone systematically to work to reconstruct its harbor, although it is handicapped by reason of the attempt to carry it out as a minor department of the city government. The five new piers before described give a frontage of approximately one mile. These docks are from 150 to 200 ft. in width, slips 150 ft. in width, and the longest piers are 1400 ft. in length. The reinforced concrete wall which has been constructed around the entire length and width of these piers has cost approximately $80 per lineal foot. The piers after being completed have been leased to various shipping companies at 36c. per square foot per year, the money for their construction being part of a $6,000,000 loan at 3½% for 50-year bonds. Of this amount there is about $1,700,000 that has been used in the new construction. At the outer end of the inner harbor are the ocean terminals at Locust Point of the Baltimore & Ohio railway. Across on the opposite side are the terminals of the Pennsylvania railway, while to the south in the outer harbor are the terminals of the Western Maryland railroad.

Newport News has been developed as a harbor from which large shipments of coal are made, and is much better equipped than some of the older and better known harbors. Savannah, Georgia, is one of the greatest shipping points for cotton in the South, although the harbor is not very extensively improved, nor are the docks of modern type, nor equipped with any freight-handling machinery.

New Orleans has proceeded (under state control and probably the largest ownership of its waterfront of any United States port) to construct modern docks with modern equipment for the handling of the great commerce which passes through that port. Galveston, Texas, has just completed the dredging of the inner harbor and the construction of the great sea-wall to protect the city from storms, and is fast becoming one of the great grain and cotton-exporting ports of the United States.

The Pacific coast of the United States, which interests Seattle more than any other part of the world, has awakened recently to the necessity of constructing harbors and providing better facilities of every kind for taking care of ocean commerce. Los Angeles has annexed a narrow strip of territory 21 miles in length to the ocean, taking in San Pedro, so that by this means it has become a port, and $10,000,000 has been voted for improvements. The harbor of San Pedro was formerly an open roadstead, but has been protected by a heavy breakwater built by the United States Government. It is now proposed to dredge out the inner harbor so as to provide docks adjacent to the railroads and in close proximity to manufacturing sites, so that commerce will be attracted to southern California.

San Francisco has been mentioned before as constructing its harbor under state control, $25,000,000 having already been expended and $11,000,000 more voted for further improvements. Many of the docks are of first-class temporary construction, being wooden piers with wooden warehouses, although no freight-handling devices are provided. The docks for taking care

Generated on 2024-09-30 00:31 GMT / https://hdl.handle.net/2027/uiug.30112007838003
Public Domain, Google-digitized / http://www.hathitrust.org/access_use#pd-google
Digitized by Google
Original from
UNIVERSITY OF ILLINOIS AT
URBANA-CHAMPAIGN

of the trans-Pacific commerce are in the neighborhood of 800 ft. in length and accommodate the largest ships coming into the port. Some of the newer docks, notably those constructed for the use of the Western Pacific railway, are of permanent construction and are to be provided with freight-handling machinery. Two dry-docks are available for use at Mare Island Navy Yard, and a third one at Hunter's Point, privately owned, is large enough to take care of all but the very largest vessels.

Portland, Oregon, has been handicapped by the necessity for construction of jetties at the mouth of the Columbia river, so as to obtain deeper water over the Columbia River bar. This work has progressed so far that from 25 to 30 ft. depth is insured, and the Columbia and Willamette rivers up to Portland, a distance of about 100 miles, have been dredged out to a depth of about 24 ft. at low water to accommodate a certain portion of the ocean commerce tributary to the Northwest. It is necessary, however, to maintain dredges for the constant dredging of the river, to keep a depth sufficient for ordinary ships. It is proposed to add further port equipment, or dredges, to effect and maintain a depth of 30 ft. at low water. The dredge *Portland* is a 20-in. suction dredge, and the dredge *Columbia* a 30-in. suction dredge, both of the most modern type and capable of rapid and economical dredging out of the bars that form in the river channel. The United States Government has recently remodeled the sea-going dredge *Chinook*, and it is expected that it will be in service on the Columbia river bar in the near future. It is estimated that it will be necessary to expend in the neighborhood of $3,500,000 to obtain a depth of 30 ft. from Portland to the ocean, and this would require maintenance at great expense in the future. The wharves at Portland are built parallel to the shore, are of timber construction, and very poorly designed to take care of ocean commerce, this being partly brought about by the necessity for providing for the floods in the Willamette and Columbia rivers. No freight-handling devices are employed, although $2,500,000 has been voted for building modern docks and for providing a certain amount of port equipment.

Seattle has expended and authorized, as itemized in this paper, approximately $21,300,000, and while some of this is to be expended for the construction of waterways and canals, a port bill has been passed by the legislature so that modern docks and freight-handling machinery are being provided, such as will attract ocean commerce of an extensive nature.

The American-Hawaiian line, operating between the Atlantic and Pacific coasts by way of the Isthmus of Tehuantepec, has already been mentioned, but it is well at this point to refer to the fact that freight is handled so cheaply by this route, owing to the facilities provided for the trans-shipment of freight at the isthmus, and owing to the shorter distance between the two coasts, that it will be possible to continue the operation of the vessels of this line at a profit after the Panama canal has been opened. The Panama canal will doubtless cause an entire readjustment of the world's commerce, as was the case when the Suez canal was opened, although it is impossible to predict just how this will affect the Pacific coast of the United States. It is practically certain, however, that it will not cheapen freight rates more than has already taken place through the operation of the American-Hawaiian line, which handles freight at approxi-

Generated on 2024-09-30 00:31 GMT / https://hdl.handle.net/2027/uiug.30112007838003
Public Domain, Google-digitized / http://www.hathitrust.org/access_use#pd-google
Digitized by Google
Original from UNIVERSITY OF ILLINOIS AT URBANA-CHAMPAIGN

mately two-thirds of the transcontinental rail rate.

While undoubtedly it is well for the Pacific Coast ports to prepare for the commerce consequent upon the opening of the Panama canal, it is of greater necessity to prepare for the trans-Pacific commerce due to the great and rapid development of the Oriental countries.

South America is usually considered as a semi-civilized continent, but in many respects it is equal in development to European countries and to the United States. South American ports are in many respects the equal of European ports, and in most cases in advance of United States ports of corresponding importance. On the west coast of South America the port of Guayaquil, in Ecuador, has reached considerable development as the ocean terminal of the Guayaquil-Quito railway, by which the interior of Ecuador is reached. Callao, in Peru, has some remarkable harbor improvements for a country of no greater development than Peru. Valparaiso, Chile, has some very extensive harbor improvements, and the docks are provided with first-class freight-handling machinery for the economical handling of freight.

Buenos Ayres, the great port of the Argentine Republic, has been improved under the direction, as consulting engineer, of E. L. Corthell, of New York City, who, with James B. Eads, constructed the great Mississippi jetties. Great grain elevators have been constructed for handling grain shipments of the Argentine Republic, and the docks are of modern design and equipped with freight-handling machinery such as would be found in first-class European ports. Rio de Janeiro, in Brazil, is well provided with docks, although it has no such development as is found at Buenos Ayres.

The trans-Pacific countries are rapidly developing, and the Japanese, with that great adaptability which characterizes them in everything they undertake, are dredging and improving their harbors and providing facilities of modern type in every respect. In Osaka harbor, for example, dredges of various types are employed in deepening the harbor. Sea-walls and breakwaters are being constructed, and preparations are being made in all Japanese ports to take care of the Pacific commerce with a great fleet of mercantile vessels which are plying to every port of the Pacific, of which the Nippon Yusen Kaisha and the Osaka Yusen Kaisha, operating to Seattle, are examples. Except at Hongkong, which is an English port, but little has been done in Chinese ports toward development, it being necessary at many places to lighter the cargo from the vessel into the port owing to shallow water.

The Australian ports of Melbourne and Sydney have been improved with that solid system of construction which is characteristic of English countries throughout the world.

Manila has had expended upon its harbor upward of $4,000,000 in dredging the harbor, building sea-walls, and filling in along the waterfront, so that a great commerce is being taken care of in a much more efficient manner than before the American occupation.

Generated on 2024-09-30 00:31 GMT / https://hdl.handle.net/2027/uiug.30112007838003
Public Domain, Google-digitized / http://www.hathitrust.org/access_use#pd-google
Digitized by Google
Original from UNIVERSITY OF ILLINOIS AT URBANA-CHAMPAIGN

Graphical Studies of Oil Formations

By A. T. PARSONS *

IT goes without saying that a study of formations is of the greatest importance at every point in the development of an oil property. Anyone connected with the oil production will recall many instances where a large amount has been wasted in the vain endeavor to develop oil where every indication was against it. But it is probable that more money has been lost through lack of careful study of formations in developed territory, than in 'wild-catting' against the judgment of the geologist. The abandoned derrick 'on the wrong side of the break' is very noticeable, and everyone hears about the $25,000 or $50,000 that 'went down the hole.' But a few miles away there may be a developed property producing a fair amount of oil, where $100,000 has been spent unnecessarily because the operators did not understand the territory. Waste may not be so conspicuous as with the 'wild-cat,' but the chances of the stockholders getting returns for their money are little, if any, better.

The fundamental basis for the study

*Engineer, Universial Oil Co., Wasco, California.

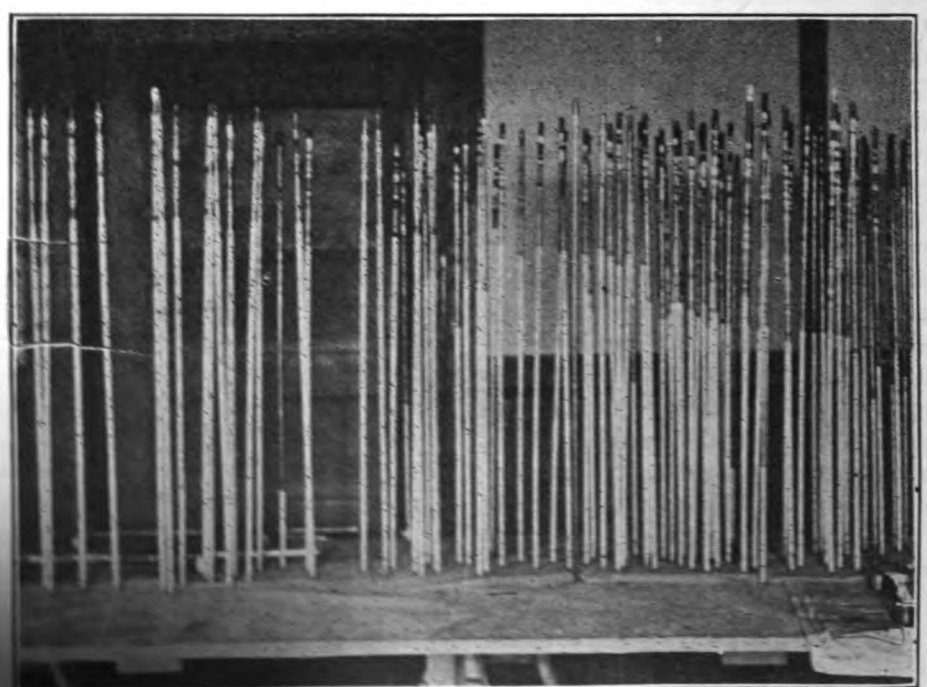

MODEL OF GROUP OF OIL WELLS.

Generated on 2024-09-30 00:30 GMT / https://hdl.handle.net/2027/uiug.30112007838003
Public Domain, Google-digitized / http://www.hathitrust.org/access_use#pd-google
Digitized by Google
Original from
UNIVERSITY OF ILLINOIS AT
URBANA-CHAMPAIGN

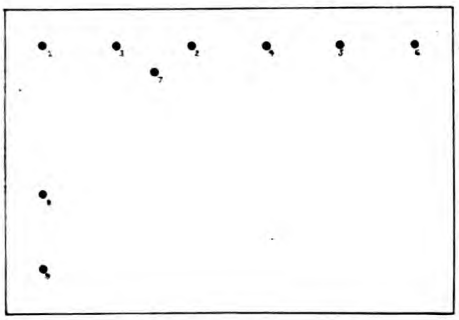

FIG. 1.

of the formation underlying a developed or partly developed property is the logs of the wells in the vicinity. With almost every company the log of the well is made up from day to day by the driller himself, sometimes with occasional special notes by the superintendent or other officers of the company. A discussion of the various forms and methods for keeping these logs is outside the province of this article. So also is the vexed question as to whether it is possible to keep an accurate log of a well drilled by a 'rotary.' Assuming, however, that the log and other records of the well are in good shape and give all the information to be expected, what further work can be done to facilitate the study of the underground formations on a given property?

Some study of the formation is possible directly from the written log. Where the strata are practically level, as in water-well operations in the larger valleys, the driller who has worked in a certain district for some time can usually predict the approximate depth of the water-bearing strata. Again, taking the oil property shown in Fig. 1, if the log of well No. 1 shows a distinct 'shell,' or stratum of hard material, at 500 ft., and a water sand at 550 ft., and the log of well No. 2, 1000 ft. away, shows a similar shell at 700, it is probable that the water sand in the latter well will be struck at about 750 ft. It would be more probable still if the logs of two wells showed a practical agreement throughout as to the kind and thickness of formations, those in well No. 2 being approximately 200 ft. deeper. Again, if well No. 2 does find the water at 750 ft., it becomes highly probable that Well No. 3, halfway between No. 1 and 2, will strike it at about 650 feet.

From the simple list of formations, depths, casing, etc., a 'graphic' log, on the general plan of Fig. 2, may be drawn. The principal advantage of doing this is that of most graphic methods, namely, of bringing the information more vividly before the eye and therefore the mind also.

A development of this method is shown in Fig. 3, where a cross-section

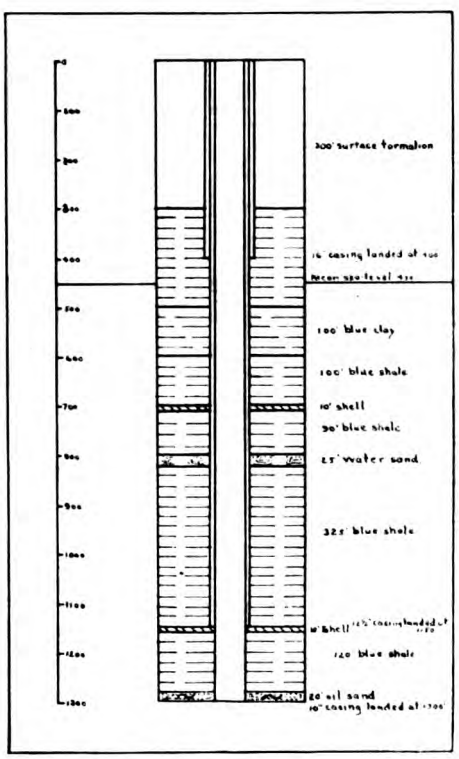

FIG. 2.

Generated on 2024-09-30 00:28 GMT / https://hdl.handle.net/2027/uiug.30112007838003
Public Domain, Google-digitized / http://www.hathitrust.org/access_use#pd-google
Digitized by Google
Original from UNIVERSITY OF ILLINOIS AT URBANA-CHAMPAIGN

showing the two logs has been prepared. If wells 4 and 5 have been completed and platted, the study of the strata is given a better foundation, and a fairly accurate prediction can be made of the strata to be encountered in well No. 6, situated beyond the developed territory.

The method of cross-sections works fairly well when the wells are all in a line, and even throws considerable light on a well such as No. 7. But with regard to well No. 8 but little can be learned. Even if well No. 9 has been drilled, another cross-section must be prepared. It will readily be seen that in the case of a large property, it would be necessary to make a very large number of cross-sections. A further objection is that it soon becomes very difficult for the mind to combine in their proper sequence the various facts shown by a number of cross-sections.

An underground contour map such as is shown in Fig. 4 may also be prepared and depths predicted with the aid of a surface contour map. While these maps are usually made simply for the oil-bearing strata, there is no reason, save the vast amount of labor involved, why separate maps should not be prepared for formation which it is desired to study. However, in this case also, the proper combination of the data would require a mind with an almost superhuman grasp of detail.

Another device, comparatively new in the oilfields, although a similar device is well known in mining circles, is also valuable. A model of the territory to be studied is prepared in the following manner. A map of the district, showing the position of all wells, is drawn and mounted on a board. Holes are drilled in the board at each well location, and either hardwood or metal rods are inserted. These rods are painted to correspond with the different formations, all to a given scale. The surface of the board corresponds to a certain elevation above or below sea-level, the length of the rods varying with the elevation of the well. It will be found convenient to indicate cement jobs, plugged wells, etc., upon the rods. By scaling off distances on the rods, the depths of the various formations may be obtained with considerable accuracy, the written log being depended upon for exact depths. The trend of the

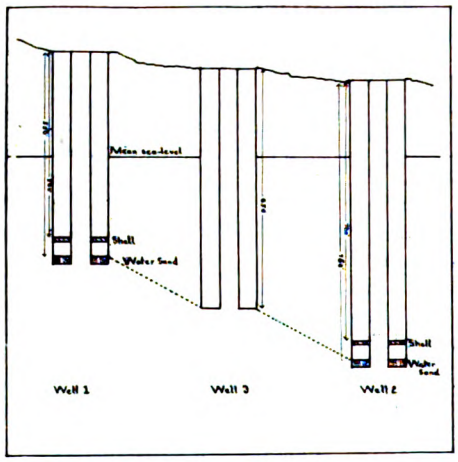

FIG. 3.

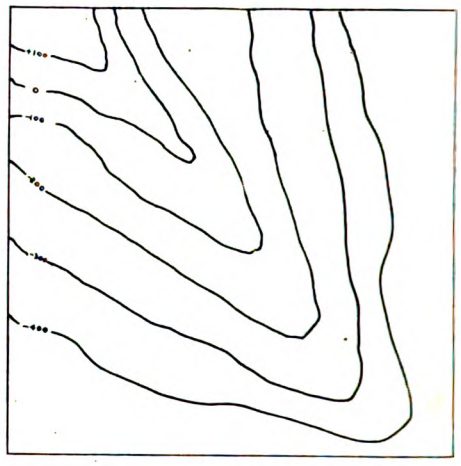

FIG. 4.

Generated on 2024-09-30 00:29 GMT / https://hdl.handle.net/2027/uiug.30112007838003
Public Domain, Google-digitized / http://www.hathitrust.org/access_use#pd-google
Digitized by Google
Original from UNIVERSITY OF ILLINOIS AT URBANA-CHAMPAIGN

strata in any direction where wells have been drilled may be ascertained by laying a straight-edge between similar formations and the depth of a formation at a given point estimated by measuring from the datum. Fig. 5 shows such a model.

With a model of this character, the general features of the formations of a given territory are apparent at a glance, and important points might be overlooked entirely in a study of a mass of cross-sections.

The practical value of all such information can scarcely be overestimated. Let us suppose that two water sands have been passed through in a given well and that the surrounding wells also showed only two. The natural assumption would be that no more water would be struck, and the casing would be cemented at the next favorable opportunity. A study of the entire situation might, however, disclose that there was only a thin streak of clay between the two sands already encountered, and that they both should be connected up with the upper sand in the other wells. Failing this study, upon drilling through the cement and into the lower water sand, it will be necessary to cement another string of casing. This means a heavy additional expense as well as a hole reduced in size.

The reverse frequently happens. Let us suppose that there are two oil sands in a given territory, and that the upper one at least is of high gravity. On drilling into it with the hole full of water it is very easy to mistake this for a water or even a dry sand, continue farther and cement below the sand and continue down to the second sand. Not only is the production from the upper sand lost, but the water above follows down the casing into the upper oil sand, going no farther because of the cemented casing below, and floods this sand, possibly ruining a dozen neighboring wells.

Instances might be multiplied, but enough have already been mentioned to illustrate the importance of the knowledge of underlying strata, and the fact that every possible effort should be made to obtain and apply this knowledge to the study of formations.

Generated on 2024-09-30 00:29 GMT / https://hdl.handle.net/2027/uiug.30112007838003
Public Domain, Google-digitized / http://www.hathitrust.org/access_use#pd-google
Digitized by Google
Original from
UNIVERSITY OF ILLINOIS AT
URBANA-CHAMPAIGN

Trade Wastes at Stockton, California

By E. L. GRUNSKY*

THE waste waters of a tannery, of the gas works, and of a wool scouring plant were examined recently at Stockton, California, in connection with the preliminary studies made under the direction of C. E. Grunsky, consulting engineer, who is planning sewage disposal works and sewer extensions for that city.

The present situation at Stockton has been referred to in a previous article.† It remains to be stated that the foul condition of the waters of Mormon slough, which is a dead though navigable arm of Stockton channel, is not due entirely to the discharge of Stockton's sewage into the slough. Less than 1000 ft. up-stream from the point where the sewage is discharged into the slough is a wool scouring plant which delivers, with its waste water, nearly 40% as much suspended matter into the slough as is put into it with the sewage of the rest of the city. The gas works, where gas is made from oil, are also on the bank of the slough and discharge their waste water into it. These establishments have been examined and also a tannery to ascertain the amount and character of the waste water which, with or without treatment (in addition to such as is already provided) must either be taken into the sewers or allowed to flow into the waters of Stockton channel or Mormon slough. The sanitary analyses, through the courtesy of the State Board of Health, were made by the chemist for the board, Professor M. E. Jaffa of the University of California.

The Wool Scouring Plant.—Although the wool scouring plant is not a large establishment the amount of solid matter and suspended solids in its waste water are relatively large. About 18,000 lb. of wool is treated at the plant daily. The wool is first placed in a scouring tank containing a strong solution of soap and lye. The capacity of this tank is 2760 gallons and its contents are emptied into the slough twice each day. From this tank the wool goes into a second tank, also containing soap and lye solution. The contents of the second tank are emptied from time to time into the first tank. From the second tank the wool is passed through a third tank, containing a soap solution. This soap solution is used to replenish the second tank, lye being added to it in the second tank as required. From the third tank the wool goes into a rinsing tank. A constant flow of water is passed through the rinsing tank. The effluent from the rinsing tank flows into Mormon slough and the entire contents of the rinsing tank are emptied into the slough twice each day. After rinsing, the wool is treated with acid in an acid tank. The acid tank remains in continuous service and there is no waste from it.

The discharge from the tanks is into an open conduit or ditch under the

*With the American Engineering Corporation, San Francisco, California.
†*Western Engineering*, March 1914.

Generated on 2024-09-30 00:30 GMT / https://hdl.handle.net/2027/uiug.30112007838003
Public Domain, Google-digitized / http://www.hathitrust.org/access_use#pd-google
Digitized by Google
Original from UNIVERSITY OF ILLINOIS AT URBANA-CHAMPAIGN

building, from which it flows through a wooden pipe into the slough, dropping into it from a height of 3 to 8 ft. The discharge of the wastes into the slough in this way causes the formation of a thick, dirty white, frothy scum which floats in an unsightly mass upon the surface of the slough. The steaming vats in which the wool is treated give off a very disagreeable and sickening odor. The odors of the effluent from the various tanks are not particularly strong nor offensive. The average discharge of waste water from the wool scouring works has been estimated as follows:

	Gal. per day.
Rinsing tank—continuous flow.	3,880
Rinsing tank—emptied twice daily	7,760
Soap and lye tank—No. 1, emptied twice daily	5,550
Total daily waste water	17,140

About twice a week, after scouring black wool there is an increased discharge of waste water, estimated as follows:

	Gal. per day.
Rinsing water—continuous flow	3,880
Rinsing water—emptied twice daily	7,760
Soap tank	2,750
Soap and lye tank No. 2	2,750
Soap and lye tank No. 1, emptied twice daily	5,500
Total for the day	22,640

The effluent from the rinsing tank has a slight yellowish color and is comparatively clear. It leaves no deposit upon a 40-mesh screen. Tested in an Imhoff tube it showed a deposit of light flocculent matter amounting to 3 parts in 1000 at the end of 13 hours. The effluent from the first soap and lye tank is dark and turbid. It leaves no deposit on a 40-mesh screen. Tested in an Imhoff tube a deposit of 81 parts in 1000 was obtained in 5 hours. This is about 30 times as much as was found in the city's ordinary sewage. The supernatant liquid remained dark and turbid. The chemical composition of the rinsing water and of the contents of the second lye and soap tank, as the same goes into the slough is shown in Table I.

The rinsing water, as shown by the analysis in Table I, contains about the same amount of solid matter as the ordinary sewage of Stockton. There is no reason apparent at this time why waste water of this character should not be discharged into the sewer system. The waste water from the lye and soap tank is another matter. The quantity of this water is not large, ordinarily only 5500 gallons per day, but it contains a large amount of solid matter in suspension and in solution. According to the analysis referred to there are 64,800 parts per million of solid matter in this liquid; 28,755 parts per million of dissolved solids, and 35,925 parts per million of solids in suspension. Of the solids carried by this waste water about one-third, or to be more precise, 22,351 parts per million, are fats.

Compared with a like quantity of sewage,* the waste water from the soap and lye tank contains nearly 60 times as much solid matter as the sewage; it contains nearly 200 times as much matter in suspension; and it contains about 32 times as much matter in solution.

From these comparisons it was seen that the wastes from the wool scouring plant are of such amount that serious consideration must be given to the question as to whether they should be taken into the sanitary sewers. Further comparison has been made between the Stockton sewage as now arriving at the

*See *Western Engineering* March 1914.

Generated on 2024-09-30 00:33 GMT / https://hdl.handle.net/2027/uiug.30112007838003
Public Domain, Google-digitized / http://www.hathitrust.org/access_use#pd-google
Digitized by Google
Original from UNIVERSITY OF ILLINOIS AT URBANA-CHAMPAIGN

TABLE I.

CHEMICAL ANALYSES OF WASTE WATER FROM THE WOOL SCOURING WORKS.

Designation.	Parts per million. Rinsing water.	Waste water from lye and soap tank No. 2.
Total solids—Total	1082	64,680
Volatile	528	37,300
Non-volatile; mineral	554	27,300
Dissolved solids—Total	715	28,755
Volatile	250	13,243
Non-volatile; mineral	465	15,512
Suspended solids—Total	367	35,925
Volatile	278	24,057
Non-volatile; mineral	89	11,868
Fat	260	22,351
Total alkalinity as calcium carbonate	310	3,715
Hydrate alkalinity	None	*
Total hardness from determination of total calcium and magnesium, calculated as $CaCO_3$	450	151
Calcium	114	39
Magnesium	80	27
Silica and HCl insoluble residue	104	10,835

*Could not be determined owing to dark color of sample.

pumping station and the water-carried wastes of the wool scouring plant as follows:

	Lb. per day.
Total solids in the sewage	24,300
Total solids in the wool scouring water	3,055
Suspended solids in the sewage	4,150
Suspended solids in the wool scouring wastes	1,680
Dissolved solids in the sewage	20,150
Dissolved solids in the wool scouring wastes	1,380
Fats in the wool scouring wastes	1,050

The Imhoff tube tests indicate that when expressed in percentage of the total amount of suspended matter, the portion thereof which will settle out of the black waste water from the soap and lye tanks within a reasonable time is only one-sixth as great as that settling out of ordinary sewage. Nothing is known of what would take place if the wool scouring wastes, after being mixed with sewage, were passed through sedimentation tanks. It is possible that a larger proportion of the suspended matter would drop to the bottom from such a mixture than from the waste water alone, because some of it would probably be carried down by the suspended matter in the ordinary sewage.

Attention may be called to the large amount of fat in the water-carried wastes of the wool scouring plant. This will be an undesirable addition to the sewage and may interfere to some extent with its successful treatment. In view of the fact that waste water from wool scouring plants contains such large volumes of suspended matter and so large a quantity of fats, it would not be unreasonable to require that the same be passed through sedimentation tanks, and that the fats be removed therefrom before it is allowed to flow to the sewers. If any part of this requirement be temporarily waived by Stockton, the result of handling the untreated, or partly treated, wastes with the rest of the sewage will require

Generated on 2024-09-30 00:31 GMT / https://hdl.handle.net/2027/uiug.30112007838003
Public Domain, Google-digitized / http://www.hathitrust.org/access_use#pd-google
Digitized by Google
Original from UNIVERSITY OF ILLINOIS AT URBANA-CHAMPAIGN

careful study in order that the added cost and the effect upon the efficiency of sewage treatment may be determined, and that no unreasonable burden be placed upon the whole community for the benefit of one particular industry.

If it should turn out that some temporary concession can be made in this particular case, the city will no doubt take care not to commit itself to any policy that might prove embarrassing when the operations of the plant are extended, or when new wool scouring plants, or other similar industries, are established.

Gas Works.—The gas works are on the north side of Mormon slough some distance farther up-stream than the wool scouring plant. Water is here used in considerable quantity for washing and scrubbing the gas. The waste water from the works is discharged into Mormon slough through a sluice box and ditch. The waste water appears comparatively clear, though slightly oily. It feels gritty to the touch. Tested in an Imhoff tube, 2 cubic centimetres in 1000 settled out in 30 minutes. The sediment was mainly lampblack. At the time of making the examination the plant was operating at about one-half capacity. Gas was being made during 12 hours each day.

The amount of waste water discharged at that time into the slough, being practically the full amount of water used at the works, was estimated at 160,000 gallons per day. During the winter months the time of making gas will be extended to 20 hours per day and the volume of water used will be about double the observed amount.

When the plant is operating at full capacity and for 20 hours out of the 24, which sometimes occurs during periods of abnormal demand for gas, the amount of water used may increase to about 640,000 gallons per day. After being used in the washers and scrubbers, the water of the gas works is run through a 4-cell settling basin. In this settling basin it is freed so far as possible of its lampblack by the use of baffles and scum boards. After passing from the settling basin the water is filtered through excelsior. Two 4-cell settling basins are provided and are used alternately. Before the water reaches these settling basins, that from the wash boxes which carries the lampblack is passed through large preliminary settling tanks where it is freed of most of its lampblack.

The water from the scrubbers before being admitted to the 4-cell settling basins passes through a tar box from which the tar is pumped out periodically. The gas works waste water was sampled and found to have the following chemical composition:

	Parts per million.
Total solids	629
Volatile	386
Non-volatile; mineral	243
Dissolved solids—total	293
Volatile	67
Non-volatile; mineral	226
Suspended solids—total	336
Volatile	319
Non-volatile; mineral	17
*Fat	66
Total alkalinity as calcium carbonate	138
Hydrate alkalinity	None
Total hardness from determination of total calcium and magnesium calculated as $CaCO_3$	60
Calcium	17
Magnesium	8
Silica and HCl insoluble residue	58
Lampblack in suspended solids	303

*Consisted of tar and oils.

The Tannery.—The Stockton tannery was established many years ago, and is situated a little north of the geographic centre of Stockton. Until Stockton was provided with a sewer system,

Generated on 2024-09-30 00:29 GMT / https://hdl.handle.net/2027/uiug.30112007838003
Public Domain, Google-digitized / http://www.hathitrust.org/access_use#pd-google
Digitized by Google
Original from UNIVERSITY OF ILLINOIS AT URBANA-CHAMPAIGN

about 25 years ago, the tannery wastes were discharged into one of the branches of Stockton channel. When examined a few months ago it was found that the pumps at the tannery were furnishing about 6000 gallons of waste water per hour, or about 60,000 gallons in a 10-hour day. All of the water thus pumped is used in the tannery and finds its way into the sewers. The fresh hides at the tannery are salted and subsequently the salt is washed out in rinsing vats. When the salt solution in these vats becomes too strong, they are emptied. Three to four vats per day are thus discharged. From the rinsing vats the hides go into vats containing chloride of lime, which loosens the hair. When all the chlorine has been consumed the vats are emptied. Three or four per day is an average number discharging into the sewer. After the hair has been removed from the hides, the hides are placed in vats containing tannic acid and coloring matter. When most of the tannic acid and coloring matter is used up the contents of these vats are also discharged into the sewers.

The waste water from all of these vats is delivered into a large central settling basin under the floor of the tannery. The solid matter contained in the waste water settles out and the liquid passes on into the sewers. From time to time the accumulated sediment is removed from the settling tanks and is deposited on a sludge bed, where it is allowed to dry. The dried sludge is hauled away and used for filling. A sample of the contents of the settling basin which represents the waste water as it flows to the sewer was taken and a chemical analysis was made, the result of which is given in the tabulation following:

	Parts per million.
Total solids	2013
Volatile	854
Non-volatile; mineral	1159
Dissolved solids—total	1539
Volatile	563
Non-volatile; mineral	976
Suspended solids—total	474
Volatile	291
Non-volatile; mineral	183
Fat	25
Total alkalinity as calcium carbonate	362
Hydrate alkalinity	33
Total hardness from determination of total calcium and magnesium of calculated as $CaCo_3$	600
Calcium	233
Magnesium	9
Silica and HCl insoluble	51

It will be seen from the analyses here presented that the waste-water from the gas works can readily be maintained at, or be brought to, a standard of purity that will make its continued discharge into Mormon slough unobjectionable. The tannery waste water will be taken into the sewers as at present and no modification of its treatment will be required unless this shall hereafter be found to be advisable.

Generated on 2024-09-30 00:30 GMT / https://hdl.handle.net/2027/uiug.30112007838003
Public Domain, Google-digitized / http://www.hathitrust.org/access_use#pd-google
Digitized by Google
Original from
UNIVERSITY OF ILLINOIS AT
URBANA-CHAMPAIGN

Engineering Problems of the Hetch-Hetchy Grant*

By M. M. O'SHAUGHNESSY†

THE construction of the Hetch-Hetchy water-supply system is a problem of tremendous magnitude which will require most careful study so as to have the various units completed at the proper time. You will therefore understand that at this time I can only give you a very general idea of the engineering steps to be undertaken.

The fact that when we were in Washington making our fight for the passage of the Raker bill, members of the Board of Supervisors telegraphed me that they feared too many concessions were being made to the Turlock and Modesto irrigation districts, indicates that the provisions of the bill were not fully understood at that time by some of the city officials; so it is safe to assume that there are many who would welcome information as to the sufficiency of the water-supply for San Francisco and the bay cities under the provisions of the Raker bill.

Having the right under the Raker bill to impound water in Hetch-Hetchy valley, Lake Eleanor, and Cherry Creek watersheds, by constructing dams on these reservoir sites we can store in the Sierras a total of 689,700 acre-feet, or approximately 225,000,000,000 gal. of water.

In addition to the reservoir sites at Hetch-Hetchy, Lake Eleanor, and Cherry creek, there are many other feasible storage sites on the upper reaches of the San Francisco drainage area which brings the grand total storage on the drainage area controlled by San Francisco to 836,800 acre-feet, as shown by the following table:

RESERVOIR SITES ABOVE HETCH-HETCHY

Reservoir.	Capacity, acre-feet.
1. Emigrant	14,300
2. Huckleberry	52,200
3. Cherry	56,800
4. Eleanor	288,800
5. Tilden	27,800
6. Wilmer	5,000
7. Vernon	47,900
8. Hetch-Hetchy	344,000
Total	836,800

All water in those reservoirs will be surplus flood-water which now goes to waste and is a constant menace to the low-lying districts along the banks of the San Joaquin river. The city has never conceded more than 300,000 acres of land as being properly tributary to and dependent upon the Tuolumne river for irrigation water. The Advisory Board of Army Engineers, however, states that when the dams are completed and the reservoirs filled, there will be a daily supply of over 400,000,000 gal. for San Francisco, and surplus sufficient to irrigate 400,000 acres of land. Considering the availability of the Merced river on the south and the Stanislaus river on the north, and the

*Address delivered before the Commonwealth Club of San Francisco, February 1914.
†City Engineer, San Francisco.

Generated on 2024-09-30 00:29 GMT / https://hdl.handle.net/2027/uiug.30112007838003
Public Domain, Google-digitized / http://www.hathitrust.org/access_use#pd-google
Digitized by Google
Original from UNIVERSITY OF ILLINOIS AT URBANA-CHAMPAIGN

amount of land that should be properly tributary to these streams when their run-off is stored, there need be no fear that the area to be irrigated from the Tuolumne will ever exceed 300,000 acres. By the time that San Francisco needs 400,000,000 gal. per day from its Tuolumne supply, the irrigation districts can have developed 635,000 acre-feet of storage from the Tuolumne watershed alone, the waters for which will come almost entirely from drainage areas not controlled by San Francisco.

The following table shows the storage sites and storage available to the irrigation districts:

FOOTHILL STORAGE

	Acre-ft.
Dallas and Warner lake	60,000
Davis reservoir	48,000
Dickinson reservoir	60,000
Total	168,000

TUOLUMNE STORAGE OUTSIDE OF HETCH-HETCHY

		Acre-ft.
9.	Empire	35,000
10.	Coffin Hollow	12,000
11.	Lily lake	15,000
12.	Cherry Mouth	8,200
13.	Poopenaut	44,300
14.	Cottonwood	25,000
15.	Ackerson	26,000
16.	Stone	26,000
17.	Fernbrook	26,000
18.	Herndin	25,000
19.	Big creek	12,500
20.	Moccasin creek	12,000
21.	Upper La Grande	200,000
	Total	467,000

The foothill storage of 168,000 acre-feet, together with the 467,000 acre-feet of storage on the upper Tuolumne river watershed (outside of the area controlled by San Francisco and below Jawbone creek—as provided in the Raker bill) gives a grand total storage of 635,000 acre-feet available to the irrigation districts. In addition to this there is a very large storage site about five miles southeast of the proposed Davis reservoir of the Turlock irrigation district. This is known as the Dry Creek reservoir site; it has a capacity of 325,000 acre-feet. We have, then, as the available storage on the San Francisco drainage area, 836,800 acre-feet outside of the San Francisco area available for use by the irrigation districts 960,000 acre-feet.

In regard to the sufficiency of the water-supply for both the irrigation districts and the needs of San Francisco and the bay cities, I quote from the report of the Board of United States Engineers as follows:

To summarize: It appears from the foregoing discussion that for periods like 1897-1900:

1. The irrigation requirements for the Turlock and Modesto irrigation districts may be provided by their existing rights if conserved by means of 370,000 acre-feet of storage capacity.

2. Four hundred million gallons daily may be supplied San Francisco from the high areas without interfering with Turlock and Modesto rights with 560,000 acre-feet of storage.

3. The combined requirements of San Francisco, the Turlock and Modesto districts, and 240 square miles additional irrigable area (making a total of 410,000 acres, while the Raker bill provides for only 300,000 acres or three-fourths as much) may be supplied from the entire flow of the river with 750,000 acre-feet of storage, excepting only the year 1898, when there would have been a shortage of 28% in the estimated quantity of water which may be desired for irrigation of this greatly increased irrigable area. The occurrence of years with so slight rainfall as in 1898 is so infrequent that the works necessary to avoid the losses consequent upon such a shortage would not be economically justified. There will, therefore, be no injury to the irrigation interests by taking a city supply from this region, provided there can be found reservoir sites affording sufficient capacity; and in any event there will be no infringement of existing rights of the irrigation interests.

Generated on 2024-09-30 00:33 GMT / https://hdl.handle.net/2027/uiug.30112007838003
Public Domain, Google-digitized / http://www.hathitrust.org/access_use#pd-google
Digitized by Google
Original from UNIVERSITY OF ILLINOIS AT URBANA-CHAMPAIGN

Since the submission of the Army Board report, there are available practically two complete seasons of hydrographic observations at Hetch-Hetchy, Lake Eleanor, and Cherry creek, taken by the city of San Francisco. The run-off for the past two seasons has been very low; in fact, they show a more serious drain on the storage system than the period 1897-1900, taken as the basis in the Army Board report above quoted.

I have made a very thorough analysis of the water available from the Tuolumne River watershed, both for the use of San Francisco and the bay cities and the irrigation districts covering the period of 1896 to date. From this report I quote briefly as follows:

1. During the entire period, there is no time during which the irrigation needs require more than their allowance of 2350 second feet, that is, during the past seventeen seasons, in order to satisfy the full irrigation requirements, it was not necessary for the irrigationists at any time to take advantage of their right to draw up to 4000 second feet, during the period April 15 to June 13, inclusive.

2. At no time during the past seventeen seasons was it necessary to draw on San Francisco storage to satisfy irrigation requirements.

3. It will also be noted that during the high flow period of every season, the irrigation storage is completely filled, and the San Francisco storage is completely refilled during every season except 1897-1898, where there was in storage at the end of May 1898, 619,417 acre feet, about 90% of the total storage.

The maximum depletion of the irrigation storage comes in October 1898, when there is left in storage 152,645 acre feet. At the end of this same critical period, February 1899, there was left in San Francisco storage 317,212 acre feet, and in June 1899, San Francisco storage is again completely filled.

During the present season 1912-13, irrigation storage reaches its lowest point in October 1912, when there was left in storage 213,100 acre feet and it was completely filled at the end of May 1913. For the same season San Francisco storage reached its lowest point in April 1913, when there was left in storage 316,540 acre feet, at the end of June 1913 there is left in storage 521,210 acre feet.

The minimum amount left in San Francisco storage during the past seventeen seasons, as above noted, was 316,540 acre feet at the end of April 1913.

Around the San Francisco bay, in reservoir sites already developed and proposed, there can be economically made available 144,000,000,000 gal. or 440,000 acre feet. This, together with the 316,540 acre feet (left in storage at the end of the most critical period investigated) leaves San Francisco and the bay cities with enough storage on hand to supply its needs of over 500,000,000 gal. per day, for about fifteen months, without the catchment of a single drop of water.

Note.—That this report assumes only the construction of the Hetch-Hetchy, Lake Eleanor, and Cherry Creek reservoirs on the San Francisco drainage area, making 689,700 acre feet of storage and 476,000 acre feet of storage outside of the San Francisco drainage area for irrigation use. As a matter of fact, there will be a much greater quantity of available storage for San Francisco—836,800 acre feet—and available for irrigation 960,000 acre feet of storage by a proper use of all suitable reservoirs, many of which were omitted from the Army Engineers' report.

It is therefore plainly evident that no serious controversies can arise in the future between the irrigationists and the city, as with proper storage there will be ample water for both.

Construction.—In the development of the Hetch-Hetchy project, the first step will be to survey and determine the exact route of the aqueduct from Hetch-Hetchy to San Francisco. The Raker bill requires that a map of this route and of all Government land required by San Francisco for the completion and maintenance of its water and hydro-electric works be filed with the Secretary of the Interior before any permanent construction work is begun.

A wagon-road will be built from Hog Ranch to the dam-site, a distance of 9¼ miles. This will be 17 ft. wide,

Generated on 2024-09-30 00:29 GMT / https://hdl.handle.net/2027/uiug.30112007838003
Public Domain, Google-digitized / http://www.hathitrust.org/access_use#pd-google
Digitized by Google
Original from UNIVERSITY OF ILLINOIS AT URBANA-CHAMPAIGN

macadamized, and have a maximum grade of 4%. From Smith's station, on the old Oakdale-Yosemite stage route, a good road 22 miles in length has already been constructed to Hog Ranch. With a few alterations and repairs, this road will meet the present needs. Field headquarters for an engineering force will be established near the Hetch-Hetchy dam-site. Trails will be built and telephones installed to connect these headquarters with all operating divisions of the work as it progresses. A construction railroad to the dam-site will also be built, but the exact route for this has not yet been determined. When this preliminary work shall have been completed, there will be erected a temporary power-plant to generate electricity for operating air compressors, derricks, rock-crushers, concrete mixers, and other construction machinery.

Aside from the wagon-roads already mentioned (which on the completion of the work will be resurfaced and maintained by the city for the accommodation of visitors to the valley), the first permanent construction will be the Hetch-Hetchy dam and the initial unit of the city's hydro-electric development, including 20 miles of aqueduct from the early intake to Moccasin creek, costing about $9,000,000.

The height of the Hetch-Hetchy dam will be 300 ft.; its crest length about 800 ft. The structure will be of cyclopean concrete, will have a roadway along the top, and be artistically finished to harmonize with the surrounding landscape.

The Hetch-Hetchy dam to a height of 300 ft. will impound 112,000,000,000 gal. From an economic standpoint, it seems desirable to construct the Hetch-Hetchy dam to its full height of 300 ft. at once instead of to a height of 200 ft. first, as provided in the Raker bill. The reason for this is that more water will thus be rendered available for the immediate generation and uninterrupted supply of electricity, which can be sold to the irrigation districts and used by the city, thus lessening the burden of the taxpayers.

To prevent contamination of the water in the reservoir, it will be necessary to clear all the trees and shrubbery from the area that will be submerged.

Of the total reservoir area of 190 acres, only 300 acres will have to be cleared in this manner, as the remainder is barren. Some of the larger trees can be converted into lumber and used for construction purposes. The remainder will be cut down and removed from the site. While this work is in progress at the dam-site, work will also be started on the conduit at the Early intake; also on the main aqueduct and on a permanent power-plant at Moccasin creek.

The Early intake will be located on the Tuolumne river near the mouth of Cherry creek, 12 miles below the Hetch-Hetchy dam. It is proposed at first to use the river channel to convey water from the Hetch-Hetchy reservoir to the Early intake, in order to lessen the first cost and bring into early use a 50,000-hp. electric plant, the revenue from which will carry the financial burden of this portion of the outlay.

Water will be delivered from the main river channel at the Early intake by means of a temporary overflow dam 500 ft. in length and about 45 ft. high, and diverted into a pressure tunnel 10 ft. in diameter leading to Moccasin creek, 20 miles distant.

Power-house No. 1 at Moccasin Creek.—There is only one power drop in the aqueduct line first to be constructed. The power-house site for this is situated very close beside the main high-

Generated on 2024-09-30 00:29 GMT / https://hdl.handle.net/2027/uiug.30112007838003
Public Domain, Google-digitized / http://www.hathitrust.org/access_use#pd-google
Digitized by Google
Original from UNIVERSITY OF ILLINOIS AT URBANA-CHAMPAIGN

way at Moccasin creek, 6 miles easterly from where the aqueduct crosses the main Tuolumne river, and about 141 miles distant from the city hall of San Francisco, along the aqueduct line, or 150 miles around the head of the bay.

The aqueduct capacity from the Early intake down to the power-house will be somewhat above 620 cu. ft. per second, which is the equivalent to 400,000,000 gal. daily.

The elevation of tail water of this power-house is planned to be 890 ft. above mean sea-level. The water-level at the intake will be 2315 ft. and the gross fall thus 1425 feet.

The conduit from Moccasin creek power-house across the San Joaquin valley, a distance of 45 miles, will next be undertaken. The size of pipe for this purpose, and whether one large or two smaller ones are preferable, are economic and engineering problems which have not been definitely decided, and which demand the most careful consideration.

All of the tunnels along the aqueduct will be lined with concrete and smoothly finished, and all steel pipes plastered on the inside with cement mortar. The cement lining will preserve the steel pipes from rust, thus maintaining their carrying capacity undiminished.

It will be desirable to unite the westerly end of the aqueduct with the reservoir of the Spring Valley Water Co., if the same can be acquired by the city. The object is to arrange an economic plan of progressive development when practicable in order to avoid premature and unnecessary outlays for duplication of structures which would be an undue burden on the taxpayers. The completion of the Calaveras dam, now in course of construction, should add about 20,000,000 gallons per day to the present Spring Valley's water-supply, and provide ample water until the Hetch-Hetchy system is completed.

This, however, will meet the necessary demand for a short time only, barely sufficient to permit first delivery of water from Hetch-Hetchy to San Francisco.

In the future, when the demands of San Francisco warrant, the Lake Eleanor and Cherry creek units and other higher reservoirs in the city's 417,000-acre watershed will be added to the system.

Before closing I shall say a word to the gentlemen who have opposed the Hetch-Hetchy grant because they feared the storage of water would mar the park's beauties. In answer to their arguments, I shall quote from the report of the Yosemite National Park Commission, transmitted to the Secretary of the Interior in August 1904, when reporting on the boundaries of the national park:

WATER SOURCES WITHIN THE PARK

The boundaries as proposed exclude 542.88 square miles of the present park and adds 11.62 square miles, making a total diminution of area 422.26 square miles. It excludes the greater part of private timber claims. It excludes practically all mineral lands and relieves the park of that never-ending menace to its future existence. It does not exclude the very valuable water resources, but fortunately these are all capable of a use which will enhance the beauty of the park and serve the public as well. If the needs of the country below ever necessitate the storage of water within the limits of the park, the work can be done by the Government, or under Government supervision, in a way which will really contribute to the beauty of that region. The streams in the highlands which come to the brink of Yosemite and Hetch-Hetchy valleys, and pour over in cascades hundreds and even thousands of feet high, are one of the chief beauties of that region. But with the advance of summer the streams diminish greatly and in some cases dry up completely. Residents of the valley informed the com-

Generated on 2024-09-30 00:30 GMT / https://hdl.handle.net/2027/uiug.30112007838003
Public Domain, Google-digitized / http://www.hathitrust.org/access_use#pd-google
Digitized by Google
Original from UNIVERSITY OF ILLINOIS AT URBANA-CHAMPAIGN

missioner that there is a marked falling off in visitors as soon as these falls disappear or are greatly diminished. Well chosen reservoir sites in the upper valley of these streams, if judiciously utilized under Government supervision, would add beautiful lakes to the landscapes, maintain the cataracts throughout the season, and at the same time conserve the water for the people below. This possibility is suggested merely to show that the park boundaries, as proposed by the commission, have nothing within them that would jeopardize the integrity or mar the natural beauty of the reservation of the future.

The experience of other cities, such as Los Angeles and New York, in completing projects of this magnitude, should be carefully noted and profited by the citizens of San Francisco in carrying through this project. A disinterested commission of three citizens of unimpeachable character should be placed at the head of the project, and if it is carried through on a business basis, with no interruptions from the usual causes which impede municipal work, there is no reason why the Hetch-Hetchy water should not be delivered here inside of seven years; to meet any possible emergency which might arise from the exhaustion of the present sources, it is desirable that work be actively prosecuted on this project.

Due to the completion of the Panama canal and other causes, the growth of this community will be accelerated in the next ten years, and the preservation of the prosperity of the city demands the most earnest effort to complete this project long before the present supplies will be exhausted.

Before closing, it is only proper to acknowledge the masterly and impartial manner in which the Board of United States Army Engineers, composed of Colonels Biddle, Cosby, and Taylor, reviewed the application of San Francisco, and the impartial manner in which they analyzed all the possible competitive projects which were put forth by promoters to obstruct the city's application. The citizens of San Francisco should be indebted to those gentlemen for the courteous and dispassionate manner in which all features of this project were analyzed and discussed.

Oil Refinery in Persia

THE Anglo-Persian oil refinery at Abadan, Persian Arabistan, has started operations. Abadan is 44 miles below Bassorah, on the Persian side of the Shat-el-Arab. Oil was discovered several years ago above Awaz, about 140 miles inland from Abadan, and wells were sunk, and a pipe-line laid to Abadan. The work was delayed for a long time on account of local conditions in Persia, and more recently on account of strikes in England, which prevented the company from getting necessary supplies. The present daily capacity of the refinery is said to be 6000 tins of 4 gal. each, which will be increased as the market for oil expands. Gasoline and naphtha will be produced.

It is predicted that the product of this refinery will displace American petroleum, the consumption of which in this district has gone up by leaps during the last two years. During the first half of 1911, 7372 cases of 8 gal. each were imported from the United States; during the second half, 27,664 cases. Local production may be expected to decrease this amount materially.

Generated on 2024-09-30 00:34 GMT / https://hdl.handle.net/2027/uiug.30112007838003
Public Domain, Google-digitized / http://www.hathitrust.org/access_use#pd-google
Digitized by Google
Original from UNIVERSITY OF ILLINOIS AT URBANA-CHAMPAIGN

Highway Improvements, King County, Washington

By ARTHUR P. DENTON*

IN November 1911 the voters of King county, Washington, authorized a $3,000,000 bond issue to provide funds for highway improvements. At that time the proceeds from the sale of these bonds were apportioned as follows:

	Miles.	Appropriation.
1. Bothell-Snohomish	0.8	$ 8,000
2. Woodinville - Duvall (one bridge)	11.0	128,000
3. Redmond-North Bend-Issaquah-Renton (1 bridge)	15.0	120,000
4. Bothell - Redmond - Issaquah-Renton (1 bridge)	30.0	298,000
5. Issaquah-Falls City	8.0	86,000
6. Kirkland-Renton	16.0	30,000
7. Seattle-Renton	1.5	45,000
8. Renton - Maple Valley-Black Diamond	19.0	76,000
9. Auburn - Black Diamond-Franklin-Enumclaw-Auburn (1 bridge)	40.0	278,000
10. Renton-Renton junction	3.0	17,000
11. Seattle-Pierce Co. Pacific highway	21.0	330,850
12. 14th Ave. So. to Des Moines and Pierce Co.	20.0	148,000
13. Manhattan school to Des Moines road	1.0	10,150
14. Vashen island	12.0	50,000
15. Mercer island	10.0	50,000
16. Skykomish	28.5	165,000
17. In town of Bothell	1.2	18,000
18. In town of Issaquah	0.8	10,000
19. In town of Pacific City	0.5	18,000
20. New Castle-Renton	5.0	25,000
21. Greenwood and 85th St. to Lake Union	..	30,000
22. Ravenna Blvd. to 65th St.	..	10,000
23. Rainier Ave.	..	339,000
24. Woodland Park to Westlake Ave. (1 bridge)	..	250,000
25. East Marginal way	..	175,000
26. Bridge over canal at Latona	..	80,000
27. Bridge over canal at Fremont Ave.	..	70,000
28. Bridge over canal at Montlake Ave.	..	30,000
29. 14th Ave. South	..	75,000
30. Richmond Beach to N. Trunk Blvd.	..	30,000

Amount to be expended in the city of Seattle:

	Appropriation.
21. Greenwood and 85th St. to Lake Union	$ 30,000
22. Ravenna Blvd. to 65th St.	10,000
23. Rainier Ave.	339,000
24. Woodland Park Ave. to Westlake Ave., including bridge over canal	250,000
25. East Marginal Way	175,000
26. Bridge over Lake Washington canal at Latona	80,000
27. Bridge over Lake Washington canal at Fremont	70,000
28. Bridge over Lake Washington canal at Montlake	30,000
29. 14th Ave. South	75,000
Total	$1,159,000

Amount to be expended in towns:

	Appropriation.
17. In town of Bothell	$ 18,000
18. In town of Issaquah	10,000
19. In town of Pacific City	18,000
Total	$ 46,000

*County Engineer, King County, Washington.

Generated on 2024-09-30 00:31 GMT / https://hdl.handle.net/2027/uiug.30112007838003
Public Domain, Google-digitized / http://www.hathitrust.org/access_use#pd-google
Digitized by Google
Original from UNIVERSITY OF ILLINOIS AT URBANA-CHAMPAIGN

Distribution:

Total amount for:	Appropriation.
City of Seattle	$1,059,000
Towns	46,000
County	1,895,000
Total	$3,000,000

Amount to be expended for paved highways in county, outside of cities and towns:

	Miles.	Appropriation.
7. Seattle-Renton	1.5	$ 45,000
11. Pierce Co. Pacific highway	11.0	330,850
	22.5	$ 375,850

Amount to be expended for re-location, grading, and graveling roads, outside of cities and towns, and building bridges: 16 miles; $1,529,150 appropriation.

The map shown here indicates the approximate location of the various projects mentioned in the table. At this time $350,000 of the total issue has been sold, and, of this amount, $50,000 has been paid in and used for engineering and right-of-way purposes. It is expected that $250,000 will be available for construction purposes early this year. It is further contemplated to advertise for sale $500,000 to $700,000 of these bonds, which, according to law, must be sold at par. These are 20-year bonds in denominations of $1000 and bear interest at 5 per cent.

The following gives a summary of the status of the work by project numbers:

1. Is located; right-of-way obtained; ready to let the contract as soon as money is available.

2. Eleven miles of location made, but an alternate location will be made to take the place of the original line.

3. Located, and most of the right-of-way obtained; 19½ miles in length; 4.4% maximum grade.

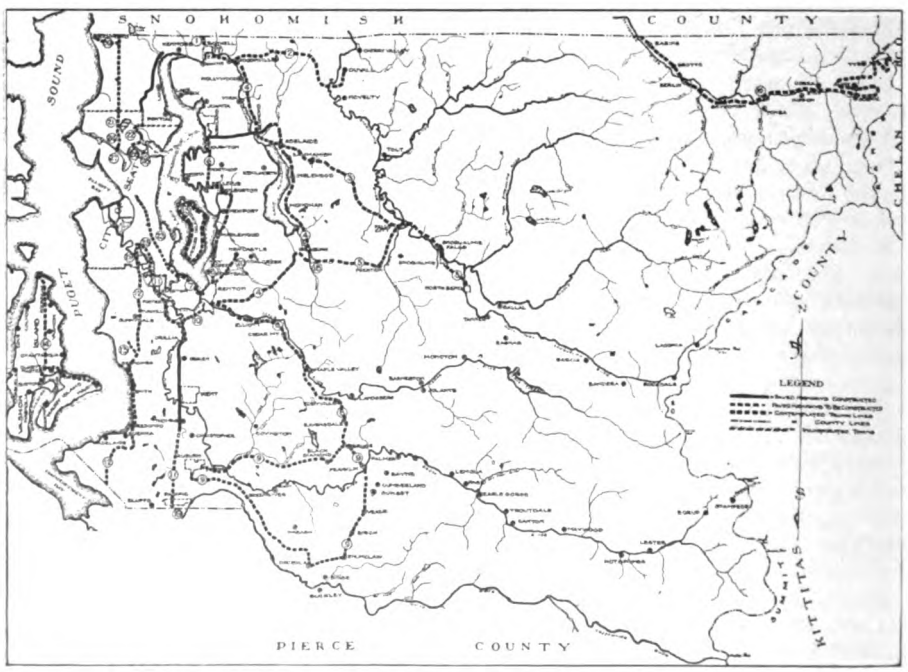

MAP OF HIGHWAY IMPROVEMENTS, KING COUNTY, WASHINGTON.

Generated on 2024-09-30 00:31 GMT / https://hdl.handle.net/2027/uiug.30112007838003
Public Domain, Google-digitized / http://www.hathitrust.org/access_use#pd-google
Digitized by Google
Original from UNIVERSITY OF ILLINOIS AT URBANA-CHAMPAIGN

4. About 21 miles located; portion of the right-of-way obtained.

5. Location under way; contemplating 4% maximum grade.

6. Eight miles of location made, with 5½% maximum grade; alternate location will probably be made for a portion of this.

7. One and one-half miles long; located and graded; 1% maximum grade; this portion to be paved.

8. Location will be made during this spring; contemplating a 4 or 5% maximum grade.

9. Five and seven-tenths miles located between Auburn and Black Diamond, with a 4% maximum grade; portion of the right-of-way obtained; between Auburn and Black Diamond, 14 miles located, and 4% maximum grade; balance of the location being made at the present time.

10. Final location has not been made.

11. In the main part, which contemplates paving, will further existing highways, although there are several changes in the existing rights-of-way which will be made to produce the distance and grade. These locations are being made at the present time.

12. Nineteen miles of this project has been located; survey to be completed in the near future; 4% maximum grade.

13. Located, and right-of-way obtained; 4% maximum grade.

15. Thirteen and seven-tenths miles located; 5.7% maximum grade.

16. Locally known as the Cascade scenic highway; location made; 27¼ miles; contemplating 7% maximum grade; 10½ miles through the Snoqualmie National Forest obtained.

17. Location made, and right-of-way obtained; 4% maximum grade; ready to let contract as soon as money becomes available.

18. Located; about 1 mile in length.

19. Through town of Pacific; located; ½ mile in length; 1% maximum grade; portion of the right-of-way obtained.

20. One and one-half miles in length; located; 5% maximum grade.

30. No location made.

21 to 29, inclusive. Are for improving streets in the city of Seattle leading out to the main highways in the country.

The amount appropriated for each of these units is not enough to complete each project, but will supplement the funds which are to be provided through the formation of assessment districts.

HOLLOW steel piles are being employed in the construction of a new freight dock at the port of La Paz, Mexico. The dock is an addition to an existing recreation pier, and is in the form of a T, 90 ft. long, parallel to the channel and 30 ft. wide. The piles are seamless tubes 8½ in. diameter, with walls ½ in. thick. They vary from 27 to 33 ft. in length. At the bottom of each pile, there is a conical cast iron point, 18 in. long, having a water chamber within it into which a pipe connection leads. The water under pressure escapes through two 1-in. holes near the point of the casting, serving to jet the pile. Hydraulic pressure is secured on the jet by a pump outfit on a barge. Protection is provided for the piles in service by an asphalt coating over the steel. This dock is the first structure for freight-handling purposes erected at La Paz, which has one of the three naturally protected harbors on the west coast of Mexico that is now in course of improvement.

Generated on 2024-09-30 00:30 GMT / https://hdl.handle.net/2027/uiug.30112007838003
Public Domain, Google-digitized / http://www.hathitrust.org/access_use#pd-google
Digitized by Google
Original from UNIVERSITY OF ILLINOIS AT URBANA-CHAMPAIGN

Midway and Sunset Fields

By R. P. McLAUGHLIN *

[This is Preliminary Report No. 2, being one of a series of studies dealing with damage by water in California oilfields now being made by the California State Mining Bureau for the assistance of operators in the field. The first preliminary report, dealing with conditions existing in the Coalinga field, was published in the issue for March 1914. Through the courtesy of F. McN. Hamilton, State Mineralogist, we are able to publish this matter for the benefit of readers of *Western Engineering*. Copies of this and previous reports may be obtained by application to the State Mineralogist, Ferry building, San Francisco.—EDITOR.]

THE Midway and Sunset fields were visited in February 1914, and the information obtained during that visit together with that accumulated during the past five years constitute the basis of this report. As in previous work of this kind, information was readily furnished by such operators as are informed on the subject.

The two fields are not naturally divided; common usage refers to the territory south of Township 32 South as the Sunset field, while that to the north is called the Midway field. As a whole the Sunset-Midway field consists of a strip of territory extending some 17 miles northwest and southeast along the western side of the San Joaquin valley and having a width of from two to five miles. The total area of proved oil land is about 59 square miles.

The total thickness of oil-sands varies from 25 to 200 ft. They exist in the form of rather flat, non-continuous bodies, or lenses, most of which lie in two well recognized zones, which are not parallel. Water is contained in similar sands both above and below those carrying oil. There are a number of folds in the underground formations, some of which are scarcely indicated on the surface. Underground conditions are not so simple as in the Coalinga field nor so easily described. Some 1600 wells have been completed, ranging in depth from 800 to over 4000 ft. The cost of wells has been from $4000 to $100,000 each. About 170 companies own or operate property in the territory.

As was stated in the report on the Coalinga field, water will enter the oil-sands and entirely ruin a well and its neighbors unless the several strings of casing are placed securely and in their proper position. It cannot be too forcibly emphasized that the work of protecting oil-sands from water consists of two distinct branches as follows:

The casing must be landed securely, and frequently cemented by a thoroughly skilled and experienced driller. It also must be landed in the proper place, which, in most cases, can only be determined by a thoroughly informed and experienced geologist or engineer. Attempting to systematically control underground water without the services of the geologist-engineer is as absurd as sending a vessel to sea without a navigator. The two branches of work are being carried on in these

*Assistant to State Mineralogist in charge of Petroleum Department.

Generated on 2024-09-30 00:30 GMT / https://hdl.handle.net/2027/uiug.30112007838003
Public Domain, Google-digitized / http://www.hathitrust.org/access_use#pd-google
Digitized by Google
Original from UNIVERSITY OF ILLINOIS AT URBANA-CHAMPAIGN

fields. Description of methods and conditions are as follows:

The work of protecting the oil-sands is carried on by two separate and distinct concerns, namely, the county government and a semi-public association of oil operators.

For several years the position of county oil well commissioner has been occupied by a driller who has had a great deal of experience and bears a reputation of being a thorough workman. The commissioner willingly assisted the State Mining Bureau in its inquiry. During the past two years he has participated in the work of shutting off water at 156 wells. Existing legal methods controlling this position do not provide for a complete file of records and further information as to the exact nature of the work is not at hand.

The Kern County Oil Protective Association was formed in March 1912, and consists of some forty companies which make monthly payments for its support. Over 75% of the total receipts are from seven large companies which produce about 60% of the total oil, own about 64% of the proved land and 36% of the completed wells. A business office is maintained at Bakersfield, but all the detail and statistical work is done at the Taft office. There is a geologist and one assistant at the Taft office, which is also used as headquarters for the county oil well commissioner. According to its published report to subscribers dated September 15, 1913, the Association aims to give advice to operators, aiding them to shut off water, "and prepare and endeavor to have passed an adequate law to protect the fields of the state from the infiltration of water."

The report further explains as follows:

"A daily record is kept by the field force of the properties visited by them, and a detailed report is furnished the executive committee each month going fully into the work of the previous month.

"The report for the month of August gives an account of the work of 33 companies, and the progress they are making in shutting off water in their wells. An inestimable amount of assistance was rendered these companies, most of whom are not in a position to hire experts for this work and gladly avail themselves of the valuable and reliable service the Commission is able to give them.

"These properties were visited by the Commissioner or his assistants from one to ten times during the month. A copy of the monthly report is on file in this and the Taft office, and any member of the executive committee will be pleased to go over the report with any subscriber.

"We earnestly urge every company to instruct its field superintendent, or other representative, to visit the office in Taft and advise with the commissioner or his deputies in regard to water conditions in either new or old wells. Logs and cross-sections will be gladly furnished without cost to any company, of their own property or of an adjoining property, when necessary and with the consent of the owner thereof.

"It is not possible to shut off the water in all the wells now drilled, but with the coöperation of all the producers on the West Side it is possible to drill the new wells and finish them with the water absolutely shut off.

"The best results can be obtained in treating any water trouble only when all possible information can be had from neighboring wells. Will you,

Generated on 2024-09-30 00:29 GMT / https://hdl.handle.net/2027/uiug.30112007838003
Public Domain, Google-digitized / http://www.hathitrust.org/access_use#pd-google
Digitized by Google
Original from
UNIVERSITY OF ILLINOIS AT
URBANA-CHAMPAIGN

therefore, kindly furnish the Association with copies of the logs of your wells if you have not already done so? Any information that you regard as confidential will be strictly treated as such and will be used only in reaching conclusions by the water commissioner and assistants."

The cost of the Taft office, including rent, automobile operation, and salaries of the geologist and assistant, is approximately $6000 per year.

The information obtained from the Taft office of the Association was more systematic and complete than that obtained by other inquiries in the fields. Records, however, showing the amount of water coming from various wells and properties were not on file to the extent found in the office of the oil well commissioner at Coalinga, and a direct statistical comparison of water conditions in the two districts is therefore impossible. Detailed inquiry leads to the conclusion that the older portions of the Sunset-Midway fields are in almost as serious a condition as in the Coalinga field. It is possible to enumerate, even with incomplete data, about 100 wells which are making over 10% water. This is a considerably lower proportion than in Coalinga, but on the other hand, during the past year and a half, about 20 wells have been abandoned in the Midway-Sunset field, largely on account of water. These abandoned wells represent a loss of probably $500,000.

The geologist of the Association enumerated 10 properties upon which repair work had been done on wells making water, 28 which are in course of remedying, and 12 which are still doing damage that should be corrected.

An illustration of the result of drilling a well, without making use of all the information obtainable, occurred in the field while information for this report was being collected. A superintendent, who had previously finished several wells satisfactorily with advice from the Association geologist, proceeded without advice and drilled another well too far through the oil-sand and encountered a strong flow of water. This 'bottom water' was actually encountered within two feet of where it had been expected by the geologist's study of logs of surrounding wells. Advice would have been to stop drilling some 15 ft. above the point to which it was carried.

A contractor was engaged to cement the bottom of the hole after the flow of water had been checked by a 'bridge.' Providing the first cementing job is successful, the needless expense on this well will probably amount to about $500. The chief aim of the geologist of the Association is to meet exactly such circumstances in time to prevent trouble rather than aid in patching up improperly drilled wells, which is at best apt to be troublesome and unsatisfactory. Large companies frequently have a competent cementing crew, while the smaller operators usually call in one of the several successful contractors. Competent drillers and cement men are not scarce.

The greatest importance of systematic control of underground water is well illustrated in one particular portion of the Midway-Sunset field where several operators are being injured and the oil resources of the state ruthlessly wasted. There are two known oil-sands in this particular locality, both productive. There are water-bearing sands above the upper oil-sand and also between the two oil-sands. When a well is drilled into the lower sand, two extra strings of casing (about 2000 ft. of 8-in. and 2500 ft. of 6-in.) should

Generated on 2024-09-30 00:32 GMT / https://hdl.handle.net/2027/uiug.30112007838003
Public Domain, Google-digitized / http://www.hathitrust.org/access_use#pd-google
Digitized by Google
Original from UNIVERSITY OF ILLINOIS AT URBANA-CHAMPAIGN

be inserted to keep the water out of the upper sand. The extra casing and labor may amount to $10,000 per well. Some operators have neglected or refused to drill their wells in this manner and have seriously damaged others whose wells are dependent upon the upper sand, because they are of too small diameter to allow deeper drilling.

An approximate idea of the ultimate loss that will ensue unless the top sand is protected may be gained from the following figures. A single well, at present producing, has during the past 3½ years produced almost 300,000 bbl. of oil. Other wells, though not so large, should produce for a much longer time than 3½ years, and the figure is not an unreasonable one in assuming their total production. The upper sand extends over some 400 acres, and, at 5 acres per well, should supply 80 wells a total of not less than 24,000,000 bbl., or $12,000,000.

Conclusions drawn from the observations in the Midway-Sunset and Coalinga oilfields are as follows:

(1) Technical information is absolutely necessary to efficiently develop a large oilfield.

(2) The present rate of development and the size of these two fields (Midway-Sunset and Coalinga) requires the constant attention of a man in each field.

(3) The technical information will probably be more generally accepted and used by operators if the man giving it out is a public official empowered to obtain logs or other data of all wells.

(4) Legislation is doubtless necessary to prevent some operators from damaging neighboring property and to repair damaged wells owned by defunct or financially embarrassed concerns.

(5) Power to order repairs or abandonment of wells should not be lodged in the hands of a single individual.

Petroleum Production in Peru

According to the figures of the State Corps of Mining Engineers, the petroleum output of Peru increased from 37,039 metric tons (metric ton equals 2204.6 lb.) in 1903, valued at $405,460, to 167,712 metric tons, valued at $2,910,518 in 1910. Mr. Deustua places the 1911 production at about 200,000 metric tons, with a commercial value of about $2,919,900. Articles on the petroleum industry of Peru appeared in the United States Daily Consular and Trade Reports for August 7, and September 20, 1911, and July 17, 1912.

At the end of 1911 crude petroleum was selling for $10.95 to $12.15 per metric ton at Callao, kerosene for $3.40 per case of 10 gallons, and gasoline and benzine for $2.68 per case of 10 gallons.

With the exception of the reported shutting down of several of the larger operating properties in the latter part of 1911, little change in the gold-mining situation took place in Peru in 1911. A wagon-road 32 miles long has been constructed from the Aparoma gold mines to Limbani, connecting there with the main road of the Inca Mining Co. This places the mines within four days travel of Tirapata, 155 miles distant, on the Southern Railway of Peru. A private telephone line was installed from Limbani to the mines.

Generated on 2024-09-30 00:29 GMT / https://hdl.handle.net/2027/uiug.30112007838003
Public Domain, Google-digitized / http://www.hathitrust.org/access_use#pd-google
Digitized by Google
Original from UNIVERSITY OF ILLINOIS AT URBANA-CHAMPAIGN

The Engineering Digest

International Engineering Congress, 1915

RAPID progress is being made in working out the final program of papers for the International Engineering Congress to be held in San Francisco in 1915.

The first volume of the publication of the Congress will consist of a series of articles descriptive of the various technical features of the design and construction of the Panama canal. The various topics which will be treated are noted in the following list:

(1) Introductory Chapter.

(2) Dry Excavation for the Panama Canal.

(3) Dredging in the Panama Canal.

(4) Terminal Works, Dry Docks, and Wharves of the Panama Canal.

(5) Permanent Shops of the Panama Canal.

(6) Coaling Plants and Floating Cranes of the Panama Canal.

(7) Meteorology and Hydrology of the Panama Canal.

(8) Design of Locks, Dams, and Regulating Works of the Panama Canal.

(9) Method of Construction of the Locks, Dams, and Regulating Works in the Atlantic Division of the Panama Canal.

(10) Method of Construction of the Locks, Dams, and Regulating Works in the Pacific Division of the Panama Canal.

(11) Design of Lock Walls and Valves for the Panama Canal.

(12) Design of the Spillways on the Panama Canal.

(13) Gates of the Panama Canal Locks.

(14) Electrical and Mechanical Installations of the Panama Canal.

(15) Emergency Dams above Locks of Panama Canal.

(16) Municipal Engineering and Domestic Water Supply in the Canal Zone.

(17) Reconstruction of the Panama Railroad.

(18) Aids to Navigation of the Panama Canal.

(19) Geology of the Panama Canal Zone.

(20) The Working Force of the Panama Canal.

(21) Sanitation in the Panama Canal Zone.

(22) Purchase of Supplies for the Panama Canal.

Each of these topics will be treated by someone on the canal force who has been responsible for the design and construction described. The introductory chapter as well as the topic of Dry Excavation for the Panama Canal will be handled by Colonel Goethals himself.

This volume will constitute practically an official technical record of the gigantic engineering feat which is just nearing completion and will be of interest, not only to engineers but to laymen.

No similar volume has as yet been prepared upon the canal, nor is it probable that any such will be in the future. The advantage is being taken of the Congress to draw together under one cover in this way, the statements of the men who have been responsible for the work.

The program of papers for the various sections of the Congress is practically completed and notices of them will be published in the near future. Subscriptions to the Congress are being received daily and on March 1 the number of enrollment was slightly in excess of 1200, of which over 200 are from foreign countries and about 1000 from the United States. Subscription blanks have been mailed through the various National Societies to many thousands of engineers in this country and through the foreign societies to foreign engineers. The response already received is very encouraging.

Generated on 2024-09-30 00:31 GMT / https://hdl.handle.net/2027/uiug.30112007838003
Public Domain, Google-digitized / http://www.hathitrust.org/access_use#pd-google
Digitized by Google
Original from
UNIVERSITY OF ILLINOIS AT
URBANA-CHAMPAIGN

but it is trusted that all engineers interested in the success of the Congress will not fail to send in their subscriptions as early as possible. Delay in so doing renders the task of the Committee of Management more difficult, and makes it impossible to form any just estimate of the receipts which may be expected and the number of copies of the volumes which have to be published. Address W. A. Cattell, Foxcroft Bdg., San Francisco.

The Diesel Engine*

ALTHOUGH the progress made has been to some extent disappointing, the Diesel marine engine is finding increased employment in sea-going vessels. Great Britain has hitherto played a comparatively small part in this development, but several British firms are now undertaking the manufacture of such engines, and Burmeister & Wain, the Danish engineers who have had so much to do with the development of the system, have established works on the Clyde. The current year should witness a considerable addition to the number of oil engine ships. From 15 to 20 new large motorships were put into service. The engines fitted are of the two-stroke or the four-stroke cycle. Those in the former class include some of the largest vessels yet fitted with Diesel engines, such as the *Hagen*, of 5460 tons, the engines for which were supplied by Messrs. Krupp, and the *Wotan*, of 5703 tons, while the four-stroke cycle vessels include the *Siam*, of 5296 tons, the *Annam*, of the same tonnage, and the *Fionia*, all engined by Burmeister & Wain. The last vessel is the most powerful. She is equipped with two 2000-i.hp. Burmeister & Wain Diesel motors of the four-cycle type, and the power of each of these motors is as high as any yet constructed for marine work.

It is felt that the four-cycle engine has made far greater strides for ship propulsion than was first thought would be the case when the motorship made its appearance. Moreover, the results which have been obtained from motor-vessels in which this type of engine is installed have, on the whole, been rather more satisfactory than those with the two-cycle engines. With regard to the latter type, a good deal of difficulty has been experienced owing to cracked cylinder covers and also cylinder liners. Cast steel, which was employed in certain cases for cylinder heads, has been abandoned, and with the special cast iron now generally employed the cracking has been largely abolished.

AIR-COMPRESSOR TROUBLES.—Experience in service has shown, however, that the main trouble which has arisen in the marine Diesel engine is with the air-compressors. Several serious breakdowns have been attributable to the presence of oil in the air-compressors, and the explosions which have taken place in one or two instances with compressors of good design can be explained only by the breaking down of the oil of very high flash point which has been employed. Investigation has shown that under a combination of high temperature and pressure the oil had become carbonized. The danger is a very real one, but the problem is one which ought not to be difficult of solution, and it has been suggested that a committee should investigate the whole subject and devise methods for the employment of more suitable lubricants to overcome a trouble which if not remedied will seriously retard the progress of the Diesel marine engine. That progress is already checked by the high price of oil fuel, and if technical difficulties are added to commercial disadvantages the outlook will be heavily clouded.

In this country Messrs. Swan, Hunter, and Wigham Richardson have fitted Neptune Diesel engines to the cargo vessel *Arum*. The machinery in this case consists of two sets of reversible single acting Diesel oil engines of the marine type working on the two-stroke cycle. The engines are rated at 1150 hp. This ship is the first of a fleet of the same type. At Dundee two vessels under construction are to be fitted with Diesel engines of 2000 and 2200 hp. respectively. Messrs. Beardmores have supplied crude oil engines for some small ships, and Messrs. Yarrow have also done work in this field. It is understood that one of the ships

*Abstract from London *Times* Engineering Supplement, January 14, 1914.

Generated on 2024-09-30 00:32 GMT / https://hdl.handle.net/2027/uiug.30112007838003
Public Domain, Google-digitized / http://www.hathitrust.org/access_use#pd-google
Digitized by Google
Original from UNIVERSITY OF ILLINOIS AT URBANA-CHAMPAIGN

being built at Harland & Wolff's Glasgow yard is to be fitted with Diesel engines. A large number of small ships have been fitted with marine oil engines of other types than the Diesel. The Kromhout is one which is now being largely employed, the ease of reversing associated with it having brought it into favor.

Oil Engines in Warships.—Apparently little progress has been made with the problem of the application of the oil engine for very large ships, and in particular for battleships, although experimental work is progressing favorably with two or three firms interested in this question. It is hoped in Germany that two 12,000-hp. Diesel motors will be completed before the end of the current year, after which the problem of the motor-battleship may be advanced a step further. Submarines are now practically universally equipped with Diesel engines, and there is a distinct tendency to increase the size and power of these motors. Although during the past year none of the submarines for any country had greater power than 2000 hp. on twin screws, engines are being built in the chief European countries in units up to 2000 hp. for installation in a much larger type of submarine than has hitherto been common. It can, however, by no means be guaranteed that these engines will be a success, as the difficulties involved are excessive owing to the high speeds of revolution necessitated by the limitations of space and weight.

The Diesel Motor.—Engineering development is not always mainly dependent upon the engineer, who may be restrained by a number of commercial considerations which he is by no means able to control. This appears to apply particularly to the case of the internal-combustion engine, the progress in which must inevitably be largely determined by the price at which the necessary fuel is available. For this reason, the high price of oil which has prevailed in Europe during last year had a distinctly detrimental effect upon the progress of motors using this fuel, and there can be no doubt that the oil-engine trade so far as this country is concerned, would have been much larger had the anticipated reduction in the price of heavy oil been made. Present indications do not point to any marked change in this direction, but greater attention is being paid to the utilization of tar oil, which is widely employed on the Continent, and possibly in a year or two's time there may be a modification in the existing circumstances.

Gas Engines.—Despite the adverse conditions, the use of the internal-combustion motor grows more widespread, and business during 1913 was exceptionally good—probably the best on record; and while the gas-engine trade would have been still larger today had it not been for the advent of the Diesel (the talented inventor of which died in tragic circumstances during the year) and the semi-Diesel engines (which compete with it in the larger and smaller sizes respectively) it is nevertheless in a healthier state than ever previously. This statement refers mainly to the producer-gas engine, although the use of coke-oven and blast-furnace gas for motive power has shown considerable increase. There is still much to be done in this direction, and manufacturers may regard it as one of their best spheres, for the economy in operation at mines and steel works is very great. This point is all the more to be emphasized by a consideration of a probable increase in the amount of coal which will be subjected to destructive distillation for the production of heavier and lighter oils. The number of very large gas-engine units built for this country has, however, not been great, but as with the present relative prices of gas and oil the gas-engine shows to good advantage in fuel costs, the demand for the small and medium powered producer-gas plant is extremely brisk.

Few novel features were introduced during the past 12 months in gas-engines, the chief point of interest being the increasing employment of fuels other than coal in places where they are readily obtainable. Sawdust is giving good results in numerous cases, while peat and charcoal are also employed with advantage when slight modifications are made in the producers. So much experience has been gained with the gas-engine during the last decade that one is inclined to consider its design as near the limit of perfection as that of the steam-engine, at any rate so far as the present-day type is concerned. But the gas turbine still remains an unsolved problem commercially, and there is absolutely no practical development to be recorded during 1913. The Holzwarth machine, from which at one time a good deal was expected, has up to the

Generated on 2024-09-30 00:29 GMT / https://hdl.handle.net/2027/uiug.30112007838003
Public Domain, Google-digitized / http://www.hathitrust.org/access_use#pd-google
Digitized by Google
Original from UNIVERSITY OF ILLINOIS AT URBANA-CHAMPAIGN

present received no real application, and although several inventors are now working on a type in which water is injected into the turbine, no definite progress is to be recorded.

Only in one phase does the development of the gas-engine seem to be at a standstill—its use for marine purposes and the hopes that were raised a few years ago are far from being fulfilled. It is now generally felt in most quarters that the future of the marine internal-combustion engine lies with the oil motor, and, although there are certain engineers who take the opposite view, their number is not great. A few gas-engine driven vessels were put into commission during the year, but apart from one motor coaster with two 150-hp. motors, they were mainly barges with engines up to 100 hp., and usually not much over 50 hp. They were practically all built on the Continent, and chiefly in Holland.

Oil Engines.—Although the volume of the oil-engine business is probably no larger than that of gas-engines, the subject is one of greater interest owing to the development being more recent, with a consequent possibility of the introduction of more novelty in design and application. One fact of importance may first be noted, that the reputation of the few British firms building stationary Diesel engines has increased considerably, while the British semi-Diesel engine for land work is probably as good as, if not superior to, any built abroad. The sale of the former type in Great Britain has been very seriously affected by the high price of oil, but an increasing field in Canada, India, South America, and in other parts of the world has prevented any lull in the progress. There is a very marked tendency to favor the high-speed type in powers up to 500 hp. for driving dynamos, pumping plants, and similar purposes, and it is quite fair to say that in spite of the difficulties which its design involved, the Diesel motor running at 250 to 350 r.p.m. is now as satisfactory a machine as the slow-speed type of 150 to 180 r.p.m. In the higher powers (750 hp. and over) the two-cycle slow-speed engine is being favored, although the number constructed is at present relatively small. None of these (for land work) is yet being built in England, but many of the prominent firms on the Continent are doing quite well in this direction, the largest motor constructed being one of 4000 hp. with six cylinders, running at about 130 r.p.m., just completed by Messrs. Sulzer for Harland & Wolff. This will shortly be put into service, and its success will probably have a distinct influence on the development of the high-powered stationary oil-engine.

Semi-Diesel Engines.—The year was specially important and interesting to the manufacturer of the type known as the semi-Diesel engine—that is to say, the low-compression, heavy-oil engine. Orders were plentiful with practically all the firms of established repute, on both the stationary and the marine side, and several new types were put upon the market. There was no radical alteration in the design of any of them, nor do the new engines show any remarkable modification from the usual type. Larger powers were, however, constructed than were previously thought practicable, the biggest being one of 80 hp. per cylinder, or 320 hp. in four cylinders. A large number of such motors have now been built, and it seems possible that even higher powers may be obtained, although probably 500 hp. will be the limit.

The prospects for 1914 appear to be very good, and although the amount of business done will probably not be so great as that during 1912 and 1913, the difference will not be very marked, for the internal-combustion engine has shown itself to be essential in practically every sphere of power employment, and moreover the field of application is widening to a considerable extent every year.

Oil and Gas in Utah

A brief report on the oil and gas development near Green river, in Grand county, Utah, has just been issued by the U. S. Geological Survey as a result of a geologic investigation made last year by Charles T. Lupton, M. W. Ball, and R. V. A. Mills, of the Survey. An area of about 300 square miles was examined, the object

Generated on 2024-09-30 00:29 GMT / https://hdl.handle.net/2027/uiug.30112007838003
Public Domain, Google-digitized / http://www.hathitrust.org/access_use#pd-google
Digitized by Google
Original from UNIVERSITY OF ILLINOIS AT URBANA-CHAMPAIGN

being to determine if this area, in which considerable drilling for oil and gas has been done, contains any reservoirs of these materials. In the area examined in detail, the geologists found no anticlines or domes in which large quantities of oil or gas might be expected to collect. Traces of oil and small pockets of gas have been encountered in some of the wells, but in quantities so small as to afford only slight encouragement.

While the Survey's report presents no very favorable impression of the field as an oil or gas producer, such deposits are recognized as among the most difficult to locate or determine exactly, and for this reason several suggestions are offered as to the portions of the field which hold out the greatest promise for prospecting. A copy of this report, which is advance chapter D of Bulletin 541, may be obtained free of cost upon application to the Director of the United States Geological Survey, Washington, D. C.

The Patent Processes for Making Casing Head Gasoline*

By H. O. CHUTE

WITHIN the last few years the industry of producing gasoline and light boiling fluids from casing head gas and some natural and artificial gas has become a large industry, and many patents on the subject have appeared and many patented processes are being developed. In some cases the patents have only been applied for, and in others patents have been granted.

Under our patent system, each application is examined to ascertain whether the applicant has any invention, and no matter how small a part of a process an invention is, a patent may be obtained on this new feature. This novelty may be actually useful or necessary to success, or it may be only asserted to be useful by the applicant. No question is usually raised as to usefulness of a patent by the Patent Office, as it is left for future development to show that. One may also secure a patent and yet not be able to use it on account of the prior patents dominating him. Also, the Patent Office examination is not accepted by the courts as complete or really having much weight, and when the patent is litigated in the courts a prior patent may be held to render the later one invalid.

On this account, a prospective investor in patents must know something of the previous patents and what is known as 'the state of the art.'

A brief review of the art and patents should therefore be of timely interest.

Of course, it has always been known that there were so-called 'wet gases,' particularly among the 'casing head' gases or those coming from a well in which oil was also produced. It was known that the gas contained oil and that the oil contained gas. The patent to Grieg and Smith, No. 42,121, of 1864, states that "Petroleum on being taken from wells contains a large quantity of gas which when separated from the oil can be used for fuel."

This patent only discloses a method of ridding the oil from gas by blowing air through it.

In 1866 Johnson received patent No. 54,917, which clearly discloses the art of "rendering liquid the vapors which rise with or are forced up with petroleum." These are "light benzine, naphtha, etc."

The specification discloses the compression of the vapors by means of "lift or force pump * * * connected to a suitable condenser from which I gather the condensed liquid products into barrels," etc.

He states: "I employ power to actuate the pump."

His claims include "a new article of commerce, namely, the light condensable vapors which rise with petroleum and which may be pumped off under any suitable seal and condensed."

Here is clearly disclosed the primary operations of compressing casing head gas and condensing out "the light benzine, naphtha, etc."

Consequently there can be no patents in

*Abstract from *Metallurgical and Chemical Engineering*, March 1914.

Generated on 2024-09-30 00:30 GMT / https://hdl.handle.net/2027/uiug.30112007838003
Public Domain, Google-digitized / http://www.hathitrust.org/access_use#pd-google
Digitized by Google
Original from UNIVERSITY OF ILLINOIS AT URBANA-CHAMPAIGN

existence which dominate the two primary operations necessary to produce casing head gasoline.

In carrying on any commercial operation, economy is, of course, necessary, and apparatus working in an economical way is, of course, an essential, but in the Heinzerling patent of 1897, No. 575,714, which expired January 28, 1914, there is shown an air-compressor or gas-compressor cylinder and a gas-expansion cylinder, both coupled to a flywheel with a series of condensers and heat exchangers between. The specification clearly explains that the gas is to be compressed in the first cylinder and cooled in two condensers in series; with condensation of the condensable liquids, which are removed by appropriate valved containers depending from and connected with the condensers. Thence the water-cooled gas passes to other condensers cooled by the residual gas which is meantime expanded in the second cylinder, which thus aids the compression. The expansion produces cold gas which afterward, circulating through the last condensers, cools the compressed gas to a point stated to be between −25 and −40°C. The first water cooling refrigerates the gas, as stated, to 10° Centigrade.

Furthermore, this patent discloses the cooling of the gases by direct contact with cooling liquids such as calcium chloride and glycerine.

It states that "petroleum, benzine" and some others are not soluble in glycerine. The patent states "this method of direct cooling by liquids is limited, as the substance to be separated must be insoluble in the liquid."

While this patent is not specifically directed to the production of casing head gasoline, as the applicant was a German who probably never knew anything about this gas, yet the patent covers broadly any gases containing a volatile liquid, and the same machinery and process can be used on any gas, and no subsequent patent can claim any special gas unless it is shown that the special gas acts differently from any described in the patent.

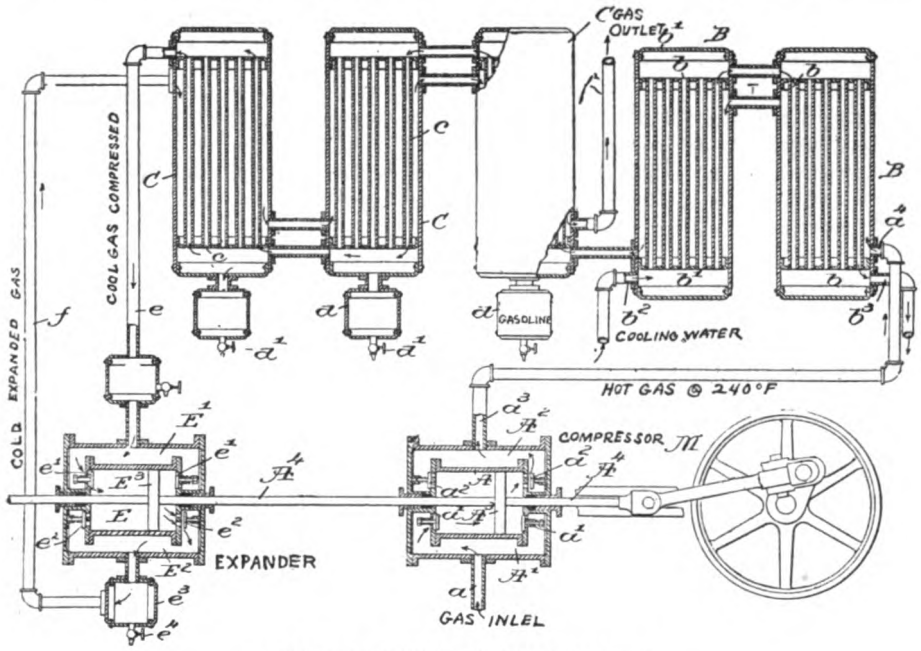

DRAWING OF HEINZERLING APPARATUS.

It would appear, therefore, that the field is open to anyone to produce casing head gasoline by using compression and condensation broadly or to use compression and water cooling on a gas and to subsequently expand the gas in a steam cylinder to help the compressor along, and that while compressing, the gas may be cooled with water, calcium chloride, or glycerine, and further that the expanded gas may be used to cool

Generated on 2024-09-30 00:29 GMT / https://hdl.handle.net/2027/uiug.30112007838003
Public Domain, Google-digitized / http://www.hathitrust.org/access_use#pd-google
Digitized by Google
Original from UNIVERSITY OF ILLINOIS AT URBANA-CHAMPAIGN

the compressed gas by means of any heat interchanger.

In most of the processes now in successful work, all the necessary steps are comprised in the above enumerated steps, which are old, as disclosed by expired patents.

It is unfortunate that in the Government publications, particularly 'Technical Paper No. 10 of the Bureau of Mines,' entitled 'Liquefied Products of Natural Gas,' published in 1912, no mention is made of the above patents, though an extensive bibliography is given in the back of the pamphlet of which very little before 1911 refers to natural gas. The knowledge of the contents of the above patents throws a light on the patent situation which cannot be gained from any of the references cited in the bulletin.

The existing patents will not be criticized in any way except to state that they must all be construed in the light of the previous art as shown by patents above cited which have expired.

Among the earlier unexpired patents is No. 668,197, of 1901, issued to Le Sueur, which claims a process of liquefying 'methane' from natural gas. The process described would not seem to liquefy methane, but it would liquefy the higher hydrocarbons of the methane series found in the gas.

This is conclusively shown by the following statement occurring in the patent: "For instance, the liquid may be produced in the first place (from natural gas) by high pressure and fractional distillation induced thereafter by relief of pressure." This patent therefore discloses the compression of natural gas and a subsequent fractional distillation of the liquids produced. This would seem to disclose a system of producing different liquid products by fractional distillation after condensation.

While the disclosure quoted is in the specification and not in the claims, it is sufficient to invalidate any subsequent patents which might broadly claim this process.

In 1907 patent No. 867,505 was granted to Dennis Hastings and W. Brink. It discloses that natural gas "after being artificially compressed" is brought into contact with water which serves to cool the gas; later "water or oil" is "atomized" to "intermingle with the gas" to cool it. This discloses the use of a "washing oil" to condense the lighter oils of the gas. It further discloses separating the cooling fluid and the condensed gasoline. This process is not claimed, but is an estoppel of later patents. The claims are for an arrangement of apparatus.

In 1909 John L. Gray obtained a patent, 993,976, for certain apparatus for obtaining casing head gasoline from the gas. The claims are for an organization of apparatus for separating, first, any engine or cylinder oil from the gas by means of the ordinary steam trap or oil trap used on steam lines; a condenser with another oil trap beyond, and a relief valve which is an ordinary steam safety valve. There is also a pot steam trap to separate the condensed gasoline from the gas, and a receiving tank.

Subsequent patents will not be commented upon, the intent of this article being to point out the things which are undoubtedly old in the art and which are free to the public.

Vitrified Brick Pavements*

By GEORGE W. KUMMER

VITRIFIED brick must be made from a shale or mineralized clay. In its manufacture it must be subjected to very high degrees of heat, amalgamating all particles thereof so that in the final test it meets the requirements of absorption and abrasion. Owing to the peculiar fact that no two veins or deposits of high grade clays, no matter where they are found, are alike, the manufacturer of vitrified brick must by actual practice work out his own methods by which to obtain the best results, a work that was first begun in the production of vitrified paving brick on the Pacific coast in Seattle just 22 years ago attended by a degree of success that has developed a vitri-

*Address before Washington Good Roads Assn. Nov. 20, 1913.

Generated on 2024-09-30 00:30 GMT / https://hdl.handle.net/2027/uiug.30112007838003
Public Domain, Google-digitized / http://www.hathitrust.org/access_use#pd-google
Digitized by Google
Original from UNIVERSITY OF ILLINOIS AT URBANA-CHAMPAIGN

fied paving brick plant with an annual output for several years past of 50,000,000 as high grade vitrified paving brick as are made anywhere in the world.

Vitrified brick is one of the essential elements of a permanent pavement whether it be in city or country highway work. Drainage, a proper foundation or base and the proper method of placing the brick in the pavement are other equally important features in the best construction. The action of water through any substance that has stability as an imperative requisite, will bring disaster. Therefore the first safeguard, in permanent pavement construction, is sufficient drainage. To this rule or law a vitrified brick pavement stands on an equality with any other material, applying this as a general rule to the base or foundation. The question of what is a suitable base or foundation for a vitrified brick pavement is an independent one and is being solved in this part of the country by practical demonstrations and as a result of the research work in this matter hereinbefore referred to. That the foundation must be stable, sufficiently strong to carry the load is indisputable. But in this, as in many other lines a custom has been followed. As city streets were improved and the planking or macadam was discarded, and bituminous materials, having no strength to resist stress, were introduced it was natural that an artificial foundation must be provided and the concrete base was used. This became a common rule and the practice was followed here for several years. During this time, however, Cuyahoga county, Ohio, and other sections in the eastern states awoke to the fact that where nature had laid a solid foundation or where a substantial macadam road had successfully carried the heaviest traffic for years, no other foundation or base was necessary. This is well substantiated by the fact that vitrified brick pavements laid on earth foundations have withstood heavy traffic in Cuyahoga county, Ohio, for over 20 years and these brick pavements are in first class condition today with the cost of maintenance as nil. Three years ago a block of vitrified brick pavement was laid in Renton, Washington, with no base whatever save the natural earth well compacted on which was placed a loose sand cushion and finally on this the top course of brick was laid, rolled, and grouted. Heavy loads have passed over this section of pavement, but it is in perfect form and condition today. A 1000-ft. strip 20 ft. wide has recently been laid on the Pacific highway at the Meadows, directly adjoining Duwamish avenue in Seattle. In the latter pavement the base was plain macadam. This section of pavement is subjected to extremely heavy traffic and is open to inspection to the most critical road builder no matter at whose shrine of material he says his daily prayers.

Natural soil conditions are, however, not present in all localities to meet the requirements of traffic and in all such places, no matter what the extent, a foundation must be provided and for this purpose a good concrete base 4 to 6 in. thick, as conditions may require, is the proper thing. In the construction of a vitrified brick pavement we then have as a first requisite, through drainage; next a concrete base, or a base of stable soil or of macadam or bituminous formation. The base of whatever character should be finished to practically a smooth plane on the surface. On this should be spread a layer of sharp sand, the admixture of a small percentage of loam being no objection, which after compression shall have a uniform thickness of at least one inch. This sand forms the cushion and must be equalized by drawing a template over it. On top of this cushion the brick or block are laid. The pavement is then rolled with a steam roller of 3½ to 5 tons weight. This rolling should be carried on until the top of the pavement is brought to a true plane. After any defective brick, which may now be readily detected, have been removed, the grout is applied. This, as well as the rolling and the smoothness of the base, is important and should have careful attention. The grout, with which the interstices of the pavement are filled, should be composed of one part of the very best cement and one part of clean sharp sand, not too fine, this being the proper proportions if brick without buttons or projections are used having a narrow opening between the different courses. If brick are laid so as to have a wider joint or opening the proportion of grout material should be 1 of cement and 1½ of sand. This difference in the amount of cement to be used is due to the fact that

Generated on 2024-09-30 00:29 GMT / https://hdl.handle.net/2027/uiug.30112007838003
Public Domain, Google-digitized / http://www.hathitrust.org/access_use#pd-google
Digitized by Google
Original from
UNIVERSITY OF ILLINOIS AT
URBANA-CHAMPAIGN

it was the cement that caused any expansion that may have occurred in the earlier constructed brick pavements, as is plainly demonstrated by longitudinal and transverse cracks in cement walks, concrete roads or curbs. In present day brick pavement construction it is found good practice to place an expansion joint composed of a tar preparation along the curb so that any expansion that may take place is taken up. Another point in brick pavement construction that practice has worked out is that instead of following the lines of a high crown in the street as is necessary in other paving materials, to protect against deterioration, all that is necessary for a. brick pavement is to give just elevation enough to insure a flow line so that the pavement will be self cleansing. This form of construction has proved the merits thereof and adds to the many points of simplicity in brick pavement construction.

A vitrified brick pavement with proper drainage, a solid base with a smooth surface, a sand cushion, the brick rolled to a true plane and properly grouted will be as smooth as a floor with less traffic resistance than that of any other known material. Such a pavement will also be enduring, under heavy traffic, as against the elements, for the surface cover—the brick—are imperishable, having been solidified by high heat, giving them the characteristic of igneous rock. Such a brick pavement or roadway has as much resiliency and has as little tendency to stave up horses as any pavement can have and still retain that most desirable feature, a long life, eliminating the maintenance cost, or the necessity of a guarantee. The guarantee on the wearing quality of pavements was for several years a contract condition as applying to materials the life of which was of comparatively short duration as compared with brick. This guarantee period, formerly ten years, was later cut down to five years, the bonding companies taking this step themselves. One of the best proofs of the permanency of brick as a paving material is the fact that guarantees on brick pavement are not asked for in the eastern states, where today vitrified brick leads all other paving materials for street paving purposes.

As to the matter of traction resistance, on which you ask for authentic data, we quote from Baker's 'Roads and Pavements' in which that eminent authority under 'Traction Resistance in Pounds per Ton' gives the following data for different road materials:

Earth road	50—200
Sand road	100—200
Gravel road	50—100
Macadam road	20—100
Plank road	30— 50
Cobble stone	50—100
Asphalt, artificial	30— 70
Wood block, rectangular	30— 50
Wood block, cylindrical	40— 80
Stone block	30— 80
Steel wheelway	15— 40
Brick	15— 40

By these data it will be seen that the traction resistance of vitrified brick in a pavement or roadway is but approximately one-half of that of asphalt, only one-half of that of wood block, and one-half of that of stone block giving vitrified brick a great advantage in the very important item of ease of traction.

An important factor in a properly grouted brick pavement, and an item of stability not generally recognized, lies in the fact that a brick pavement properly grouted is a monolith and will in itself sustain a great load. This shows an inherent strength in a properly grouted brick pavement that proves conclusively that the brick cover does not only furnish a practically indestructible wearing surface but also gives support as against the weight of traffic greatly re-enforcing the base of whatever type that may be.

Bulletin No. 23 entitled 'Vitrified Brick as a Paving Material for Country Roads,' recently issued by the U. S. Department of Agriculture, office of Public Roads, gives Charleston, West Virginia, the distinction of being the first American city to employ brick for paving in the year 1872. The demands of traffic at that time were not such as to encourage permanent road construction. Consequently for several years we find only a gradual increase from year to year in the amount of brick pavement constructed. During the last decade, however, traffic requirements have changed greatly and now demand a form of construction on our country roads as well as on our city streets of such a type as to meet these new conditions. This demand for a more permanent highway has given a tremendous impetus to the manufacture of high grade

Generated on 2024-09-30 00:34 GMT / https://hdl.handle.net/2027/uiug.30112007838003
Public Domain, Google-digitized / http://www.hathitrust.org/access_use#pd-google
Digitized by Google
Original from UNIVERSITY OF ILLINOIS AT URBANA-CHAMPAIGN

paving brick with the result that the amounts of this material used is increasing from year to year by leaps and bounds.

Among the pioneers in the adoption of brick pavement for a permanent highway Cuyahoga county, Ohio, stands pre-eminent having upward of 1200 miles of this type of construction and is today the finest permanently paved district in the world.

Statistics at hand covering brick pavements on city streets and country highways in the United States giving the total amount laid to date and amounts laid during several periods past is extremely interesting. We find that prior to 1890 there were in the United States but 2,000,000 sq. yd.; between 1890 and 1895, 5,000,000 sq. yd. were laid; between 1895 and 1900, 25,000,000 sq. yd. were laid; from 1900 to 1905, 50,000,000 sq. yd. were laid; from 1905 to 1910, 75,000,000 sq. yd. were laid; from 1910 to 1914 including work under contract this year, 60,000,000 sq. yd., a steady increase that only satisfactory service would justify.

Road Maintenance Methods and Costs for Year 1913 in Wayne County, Michigan*

JUST how the Wayne county, Mich., concrete roads were maintained in the year 1913 and just how much the work cost, are to be presented here without any reference to those features of road maintenance which are common to all highways and have no particular reference to the actual metal or hard surface of the road. The information and cost data given cover the maintenance of the concrete, including the joints, the cracks which developed in the slabs, and the small holes in the surface. The cost does not include re-shaping the shoulders nor does it include cutting the weeds and cleaning the ditches along the road.

In the concrete road maintenance, the working crew is made up of seven men and a team, and equipped with a tar kettle. The foreman is paid $5 per day, the team and driver $5 per day, the tar man $3 per day, two laborers at $2.50 each and two laborers at $2.25 each. The tools used consist of two wire-bristle brooms, a wheelbarrow, a couple of shovels, and a tar bucket with a round spout. Tarvia X† is now used exclusively.

In the beginning a lighter grade was tried out, but did not give such permanent results as the heavier grade. Two men are utilized to sweep all cracks clean with the wire brooms, after which the man with the tar kettle fills the cracks with the tar, which is heated to about 225° F. An excess of tar is poured in so that it extends an inch or so beyond the edge of the crack. It is then allowed to stand in the crack for a few minutes to prevent it from bubbling out in case the sand is wet. The sand, which should be dry and coarse, is spread with a shovel over the crack and into the tar, and the whole is left for traffic to iron out. The excess tar and sand is worn away rapidly, leaving a smooth, even surface over which no jolt is apparent in passing, either with a horse-drawn or a motor-driven vehicle. This method of repair prevents the edges of the concrete from spalling and chipping, and no water can get through to the sub-grade to freeze and heave in cold weather.

The work is preferably done on hot, dry days. It has been suggested that the better time to handle this work would be in the late fall when the cracks would be open the widest, due to contraction, but the results secured in the summer months have been so satisfactory that the other plan has not been tried out. The small pit holes, which are due simply to some foreign substance getting into the concrete (like clay, wood, or some fragment of inferior rock which might chance to be a part of the aggregate) are treated in the same manner. The cost of this method is presented in a verbatim report of the engineering staff of the Board of County Road Commissioners, George A. Dingman and George F. Key.

---

*Abstract from *Concrete-Cement Age*, February, 1914.

†Barrett Mfg. Co., New York City.

Generated on 2024-09-30 00:30 GMT / https://hdl.handle.net/2027/uiug.30112007838003
Public Domain, Google-digitized / http://www.hathitrust.org/access_use#pd-google
Digitized by Google
Original from UNIVERSITY OF ILLINOIS AT URBANA-CHAMPAIGN

COST OF MAINTENANCE ON 51 MILES OF ROAD

Michigan Ave. Road	Tar	20	bbls. at	$ 6.00	$120.00	
17 miles	Labor	10	das. at	22.50	225.00	
	Sand	18	yds. at	2.00	36.00	$ 381.00
Grand River Road	Tar	14	bbls. at	$ 6.00	$ 84.00	
10 miles	Labor	6	das. at	22.50	135.00	
	Sand	8	yds. at	2.00	16.00	235.00
Gratiot Road	Tar	3	bbls. at	$ 6.00	$ 18.00	
1½ miles	Labor	2	das. at	22.50	45.00	
	Sand	4	yds. at	2.00	8.00	71.00
Jefferson Road	Tar	6	bbls. at	$ 6.00	$ 36.00	
1¾ miles	Labor	2	das. at	22.50	45.00	
	Sand	4	yds. at	2.00	8.00	89.00
Van Dyke Road	Tar	5	bbls. at	$ 6.00	$ 30.00	
2 1-3 miles	Labor	1½	das. at	22.50	33.75	
	Sand	4	yds. at	2.00	8.00	71.75
Mt. Elliott Road	Tar	3	bbls. at	$ 6.00	$ 18.00	
1½ miles	Labor	1½	das. at	22.50	33.75	
	Sand	4½	yds. at	2.00	9.00	60.75
River Road	Tar	10	bbls. at	$ 6.00	$ 60.00	
7 miles	Labor	5	das. at	22.50	112.50	
	Sand	12	yds. at	2.00	24.00	196.50
Eureka Road	Tar	4	bbls. at	$ 6.00	$ 24.00	
4¼ miles	Labor	2	das. at	22.50	45.00	
	Sand	4	yds. at	2.00	8.00	77.00
Wayne Road, South	Tar	1	bbl. at	$ 6.00	$ 6.00	
½ mile	Labor	½	da. at	22.50	11.25	
	Sand	1½	yds. at	2.00	3.00	20.25
Woodward Ave. Road	Tar	5	bbls. at	$ 6.00	$ 30.00	
2¼ miles	Labor	2	das. at	22.50	45.00	
	Sand	6	yds. at	2.00	12.00	87.00
51 miles	Total					$1,289.25

A percentage was added to cover engineering inspection and the depreciation of machinery, buildings, and other overhead charges, making the total approximately $1450. This cost report covers the fiscal year of the Board from Oct. 1, 1912, to Sept. 30, 1913, inclusive. The greater part of this mileage was treated for the first time.

Commenting on this maintenance work, Commissioner Hines says: "Once a year is often enough to go over the work and touch it up here and there, as we have found by experience that most of the repairs previously made are intact.

"We have not had so good success in treating the entire surface of a road where the concrete from any cause has not stood the wear. One-half mile of concrete on Fort road built on contract, about 800 ft. on Grand River road built on contract, and 1¾ miles on Gratiot road (built by the county), out of the 80 odd miles of concrete road in Wayne county are not up to the standard of the balance of the construction, and they

Generated on 2024-09-30 00:29 GMT / https://hdl.handle.net/2027/uiug.30112007838003
Public Domain, Google-digitized / http://www.hathitrust.org/access_use#pd-google
Digitized by Google
Original from UNIVERSITY OF ILLINOIS AT URBANA-CHAMPAIGN

have been surfaced with Dolarway,‡ a special grade of Tarvia and Tarvia X. The surfaces of Fort and of Gratiot road were both rough, having been built in cold weather, and opened for traffic before the concrete had thoroughly hardened. Fort road was surfaced by the contractor before the Board would accept the road and make the final payment. It carries a fairly heavy mixed traffic, not so great, however, as either Grand River or Gratiot road. On Fort road a special grade of Tarvia was used. The road was first swept by a street sweeper, which was followed by men with wire brooms. About ½ gal. of bitumen to the square yard was used, and the whole covered with coarse sand and rolled with a 10-ton roller. This repair was made early in the summer and was not touched in any manner for a period of two years. By this time it had scaled off quite badly in spots, and was gone over again in the summer of 1913, using Tarvia X and a washed roofing gravel about ¼-in. size. We have no record of what the first cost was to the contractor, as the work was done without having been of any expense to us.

"Gratiot road was surfaced at cost to us by the Dolarway people in the spring of 1912. By the summer of 1913 about half of the original coating had scaled off; at that time we patched it up, using a special grade of Tarvia and Tarvia X. The Tarvia X has given the better result to date. Washed roofing gravel was used with the bitumen. This work was also rolled with a 10-ton roller. Gratiot road carries an average traffic of more than 1000 vehicles per day, the largest percentage of which is motor-driven. (On the last count made one week in August and one week in September, the average traffic per day was 1210, of which 36% was motor traffic and 64% horse-drawn vehicles.) The surface of the road is wavy, and we have found it necessary to go over the work two or three times in the summer, touching up small spots where it has scaled off here and there. The cost of the work done by our Board is in the neighborhood of 9c. per square yard."

Hints on Practice

An Apparatus for Making the Flash and Fire Tests of Lubricating Oils*

By H. L. Siever

By flash test we understand that temperature to which an oil must be heated to give off vapors, which when mixed with air produce an explosive mixture, while the fire test of an oil is the temperature at which it will give off vapors, which when ignited will burn continuously, the latter temperature being obtained by continuing to heat the oil after the flash test is made.

Oils with a high flash point, such as lubricating oils, are as a rule made in an open cup or crucible, heated by a Terrill burner in an air or a sand bath. The results obtained by making these tests in an open crucible are not always satisfactory.

There are several things to be considered when using a crucible, such as the quantity

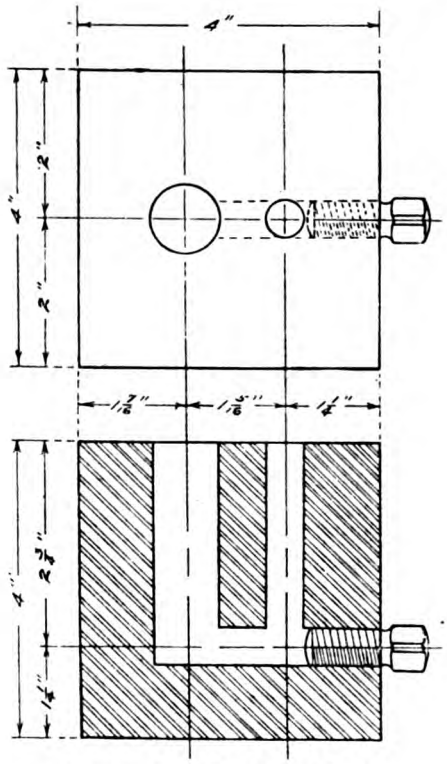

SKETCH OF TEST ARRANGEMENT.

‡Dolarway Paving Co., 95 Liberty St., New York City.

*Abstract from *Metallurgical and Chemical Engineering*, March, 1914.

Generated on 2024-09-30 00:36 GMT / https://hdl.handle.net/2027/uiug.30112007838003
Public Domain, Google-digitized / http://www.hathitrust.org/access_use#pd-google
Digitized by Google
Original from UNIVERSITY OF ILLINOIS AT URBANA-CHAMPAIGN

of oil, size of crucible, rate of heating, distance, and size of flame, drafts, etc., in fact unless these tests are made quite frequently one often forgets the exact conditions under which the previous tests were made. Porcelain crucibles are usually used for this purpose, but at high temperatures they often break, causing trouble, delay, and expense. The accompanying illustration gives the dimensions for making a tester of machine steel which has proved to be very reliable and convenient in determining these temperatures. It can be made of any cheap iron or steel at a small cost, and will last almost indefinitely.

The advantages of this over an open crucible and sand bath are obvious. The most important being the volume of oil, which is the same for all tests, while the thermometer is entirely removed from the larger portion of the oil where the test is to be made.

In practice this is placed on an ordinary iron support with a clamp for holding a thermometer. Pour 35 c.c. of the oil to be tested in the ⅞-in. hole and insert the thermometer in the ½-in. hole, apply a fairly hot flame from a Terrill burner as near the centre as possible. The testing flame should be very small and applied at the edge or drawn across the top. With this apparatus it is possible to accurately determine these temperatures to within one-half a degree.

By removing a set-screw with a pair of pliers the hot oil may be drawn off and arrangements made for a new test in a few minutes.

Book Reviews

THE MECHANICAL ENGINEER'S REFERENCE BOOK. By Henry Harrison Suplee. J. B. Lippincott Co., Philadelphia. P. 919. Index. For sale by the *Mining and Scientific Press*, San Francisco. Price $5.

This is the fourth edition of Mr. Suplee's well known work, the first having been published in 1903. An appendix has been added giving data on miscellaneous matter, including the characteristics and application of aluminum; various metal alloys; a depreciation table; general data on coal; collapsing and bursting strength of pipe; heat transmission; notes on friction and lubrication; table for the determination of speed in railway trains; train resistance; mine ventilation; tables of slopes; foundation data and masonry construction; roof construction; coefficients of friction; general data on power-transmission machinery; floor construction; reinforced concrete columns, and entropy.

HANDBOOK FOR MACHINE DESIGNERS AND DRAFTSMEN. By F. A. Halsey. McGraw-Hill Book Co., New York. P. 483. Index. For sale by the *Mining and Scientific Press*, San Francisco. Price $5.

There is nothing so vital to the practice of engineering as the systematic keeping of notes, and for this reason it is difficult to understand why so few engineers devote the time and thought to this that it deserves. Everyone will agree with the author that it is indeed enough to cause a heartache at "The manner in which contributions to technical journals of permanent value and usefulness form a procession to the limbo of forgotten things and benefit none but those under whose eyes they happen to fall at the date of publication." And even those who see do not always read, and those who read do not always file systematically for further reference. The author has undertaken the work of compiling and correlating a mass of data gleaned from technical publications of all kinds, and from this has prepared a book that is unique in its field. It is neither a text-book nor a treatise, but is a reference book in which is embodied data in the general field of mechanical engineering, the greater part of which will not be found in any other book of reference. It is difficult to estimate the value of a book of this kind, especially to the designer of machines and mechanical appliances. The following summary of the subjects covered will convey an idea of the scope of the work: Mechanical Principles of Design; Plain or Sliding Bearings; Ball and Roller Bearings; Shafts and Keys; Belts and Pulleys; Fly Wheels; Cone Pulleys and Back Gears; Spur Gears; Bevel Gears; Friction Gears; Worm Gears; Helical Gears; Planetary (Epicyclic) Gears; Ropes; Chains; Brakes; Friction Clutches; Cams; Springs; Bolts, Nuts, and Screws; Wire and Sheet Metal Gauges; Hydraulics and Hydraulic Machinery; Pipe and Pipe Joints; Minor Machine Parts; Press and Running Fits; Balancing Machine Parts; Miscellaneous Mechanisms;

Generated on 2024-09-30 00:31 GMT / https://hdl.handle.net/2027/uiug.30112007838003
Public Domain, Google-digitized / http://www.hathitrust.org/access_use#pd-google
Digitized by Google
Original from UNIVERSITY OF ILLINOIS AT URBANA-CHAMPAIGN

Construction Data; Performance and Power Requirements of Tools; Cast Iron; Steel; Alloys; Steam Boilers; The Steam Engine; The Gas Engine; Compressed Air; Mechanics; Strength of Machine Parts; Weights and Measures; and Mathematical Tables.

The great quantity of data given on design constants for various machines will be especially appreciated by draftsmen and machine designers.

Industrial Progress

Lennox Serpentine Shear

The Lennox serpentine shear, a new type of machine now being offered by Joseph T. Ryerson & Son, is designed particularly for the straight and irregular cutting of sheets and plates. The frame is a steel casting of spiral construction designed to provide sufficient clearance for material of unlimited length or width. This machine will handle not only straight cutting but also in or out curves having a minimum radius only slightly larger than the diameter of the blades. The spiral steel frame carries all gearing and is mounted on a substantial cast iron base.

All gears have teeth cut from solid metal and are provided with cast iron gear guards so the workman is fully protected while operating the machine.

The blades which are made of high grade tool steel, are set in approximately a horizontal plane. This gives a very large cutter bearing on the sheet or plate and consequently, there is very little distortion in the cutting. The upper cutter is positively driven, while the lower cutter is mounted in an adjustable sleeve, so that its position may be varied to allow for different thicknesses of material and for redressing. In addition to this, a cam is provided so that the lower blade can be dropped enough to permit the removal of sheets without reversing the machine. The cutters have a flush fastening to the shaft so that no nut projects to interfere with the handling of the work and the knurled edges feed the sheet automatically into the machine. A tool steel pin is provided to take up the end thrust on the lower cutter shaft.

Where a number of sheets are to be cut to the same pattern, a template may be bolted to the work and this template followed by guiding against the top cutter. The machine is driven by means of a two-speed pulley, giving slow speed for intricate curve cutting and high speed for straight work. The main drive shaft is extended

LENNOX SERPENTINE SHEAR.

and squared on one end so that a hand crank may be used if power is not available. This shear will reduce cutting costs fully one-half, by replacing old style hand and power cutters and thus saving time and labor in handling. The shear illustrated has a capacity for cutting No. 10 gauge material and lighter, while other sizes having capacities of No. 16 gauge, ¼ and ⅜-in. material can be furnished. All machines are arranged for either belt or hand power or direct motor drive.

Generated on 2024-09-30 00:30 GMT / https://hdl.handle.net/2027/uiug.30112007838003
Public Domain, Google-digitized / http://www.hathitrust.org/access_use#pd-google
Digitized by Google
Original from UNIVERSITY OF ILLINOIS AT URBANA-CHAMPAIGN

Obituary

George Westinghouse

George Westinghouse, the famous inventor and engineer, died of heart disease at his New York City residence on Thursday, March 12. His health had been failing for some time and consequently his death, though a great shock to his thousands of friends and acquaintances all over the country, was nevertheless in a measure anticipated. The mental alertness and wonderful vitality that had so characterized his brilliant career remained with him to the end.

Although actively associated with a large number of industries, he had during the last few years begun to transfer his responsibilities to the shoulders of his trusted lieutenants, the fortunate selection of which has always been one of the leading characteristics of his varied career.

His demise therefore will not cause any material change in the policy or operation of the companies so indelibly linked with the name of Westinghouse.

George Westinghouse was born at Central Bridge, Schoharie county, New York, on October 6, 1846; his parents were George and Emeline Vedder Westinghouse. The father's ancestors came from Germany and settled in Massachusetts and Vermont before the Revolution; the mother's were Dutch-English. Mr. Westinghouse's father was an inventor, who, in 1856, removed his family to Schenectady, N. Y., where he established the Schenectady Agricultural Works.

The boy attended the public and high schools of the town, spending much of his leisure time, after studies, in his father's machine shop. What to other lads would have been regarded as irksome and confining young Westinghouse found to be a source of amusement and instruction. Before he was fifteen he invented and made a rotary engine, and passed at an early age the examination for the position of Assistant Engineer in the U. S. Navy. In June, 1863, though barely seventeen, he enlisted in the Twelfth New York National Guard, and was discharged at the expiration of November of the same year. He then joined the Sixteenth New York Cavalry, being

GEORGE WESTINGHOUSE.

chosen corporal. He was honorably discharged in November of the following year, and a month later accepted an appointment as Third Assistant Engineer, U. S. Navy, reporting for duty to the *Muscota*, from which he was transferred to the *Stars and Stripes* and detached and ordered to the Potomac flotilla, June 28, 1865.

At the close of the war, resisting solicitations to remain in the Navy, and wishing to continue his college studies, Mr. Westinghouse tendered his resignation and was honorably discharged, August 1, 1865. On his return he entered Union College, where he remained until the close of his sophomore year, and, obedient to his impulse toward experiment, abandoned his classical studies and entered upon active life, to find a wider scope for his inventive genius. In 1865 he invented a device for replacing railroad cars upon the track, which, being of cast steel, was manufactured by the Bessemer Steel Works, at Troy, N. Y.

Going to Troy one day, a delay caused by a collision between two freight trains, suggested to Mr. Westinghouse the idea that a brake under the control of an engineer might have prevented the accident. His first thought was an automatic brake attached to the couplers which was unsuccessful. This was followed by steam, which proved also to be unsatisfactory because by the time it reached the brake from the

Generated on 2024-09-30 00:34 GMT / https://hdl.handle.net/2027/uiug.30112007838003
Public Domain, Google-digitized / http://www.hathitrust.org/access_use#pd-google
Digitized by Google
Original from UNIVERSITY OF ILLINOIS AT URBANA-CHAMPAIGN

engineer's cab it lost its power. At this point Fate seems to have entered his life. In the pages of a magazine he had subscribed to, he saw an account of the use of compressed air in digging the Mont Cenis tunnel, 3000 ft. under ground. Instantly the inventor saw the light.

He began to think over the matter, and, after much study and investigation, the use of compressed air further impressed itself on him. Drawings of the air-pump, brake cylinder, and valves were made, but considerable time elapsed before a practical trial of the brake was obtained. The first patent was issued April 13, 1869, and the Westinghouse Air Brake Co. was formed on July 20 following.

Many changes and improvements were being made in the brake all the while, the business flourished, and the manufacturing works, begun in 1869, were completed in 1870.

It was in 1870 that Mr. Westinghouse went abroad to introduce the air brake in England—a difficult problem, as the trains in Europe had hand brakes upon only what were known as 'brake-vans,' there being no brakes upon the other vehicles. Not only did this require spending seven years in Europe, between the years 1871 and 1882, but it taxed his inventive ability considerably to meet the new conditions of railroad practice.

In the meantime, Mr. Westinghouse invented the 'automatic' feature of the brake which overcame the imperfections in the first form, and removed the danger from the parting of trains on steep grades. In 1886, he invented the 'quick-action' brake, the improvement being made in what is known as the 'triple-valve'. By this valve it became practicable to apply all brakes on the train of 50 freight cars in 2 seconds. The automatic and quick-action brakes are regarded by experts as surpassing the original brake in ingenuity and inventive genius, being not mere improvements, but distinct inventions of the highest class, unique and remarkable.

About 1880, Mr. Westinghouse became interested in the operation of railway signals and switches by compressed air, and soon after there was developed and patented the system now manufactured by the Union Switch & Signal Company. The 'Pneumatic Interlocking Switch and Signal Apparatus,' whereby all the signals and switches are operated from a given point, using compressed air as the motive power, and electricity to bring that power into operation, has been successfully introduced in Boston, Jersey City, Philadelphia, Chicago, St. Louis, and many other places.

In 1886 the Westinghouse Electric Co. was formed for the manufacture of lamps and electric lighting apparatus, Mr. Westinghouse having become interested in the subject. The business rapidly developed and in 1889 and 1890 this company absorbed the United States Electric Co. and the Consolidated Electric Light Co. In 1891 all these properties were reorganized into the Westinghouse Electric & Manufacturing Co., which owns extensive works at East Pittsburgh, employing over 22,000 people.

In 1892, Mr. Westinghouse secured for the electric company the contract for the electrical equipment of the World's Fair at Chicago, and in 1893 the contract for the large generators at Niagara Falls, both of which marked epochs in the progress of the electrical industry.

In 1895 the electric company outgrew the small quarters at Garrison Alley and moved to East Pittsburgh and the same year works of the British Westinghouse company were established at Manchester, England. The question of the steam turbine and its applications was investigated by Mr. Westinghouse and he secured the patent rights of Chas. A. Parsons of England on the turbine in 1897-98. This development of a new prime mover soon led the inventor to consider the use of the turbine for ships. The trouble was the high speed. Mr. Westinghouse then developed and brought out one of the most ingenious of modern mechanical engineering. This was the mechanical reduction gear for reducing the inherently high speed of a turbine to the slow speed of a ship propeller or direct current dynamo. This device is destined to revolutionize marine construction. He accomplished this work in collaboration with the late Admiral Geo. W. Melville, U. S. N., and John H. MacAlpine. Within the last few years he also occupied himself with the development of an air spring for automobiles and motor trucks which rapidly came into favor.

Mr. Westinghouse rendered an invaluable service to the electrical development of the world, when, in spite of opposition, ridicule

Generated on 2024-09-30 00:33 GMT / https://hdl.handle.net/2027/uiug.30112007838003
Public Domain, Google-digitized / http://www.hathitrust.org/access_use#pd-google
Digitized by Google
Original from
UNIVERSITY OF ILLINOIS AT
URBANA-CHAMPAIGN

and all the unfair efforts to crush his alternating current system, he remained steadfast in his belief that this class of high-tension transmission would make distant electrical distribution possible. This system his engineers developed, and incidentally in this connection secured Nicola Tesla, 1887, who invented the alternating-current induction motor. The world today lighted by distant waterfalls and central stations, now recognizes its debt to Mr. Westinghouse's foresight and perserverance.

A struggle almost identical with that of the earlier fight for alternating-current transmission, is the recent development of alternating-current traction by means of the single phase motor which the Westinghouse Electric & Manufacturing Co. has now wrought into an accomplished reality in the case of a number of traction lines, railroad terminals, and tunnels. In spite of the same bitter competition, refined in its subtility only by the advance of the years, Mr. Westinghouse achieved a far step in electric railway practice which the electrical world was quick to follow just as in the case of alternating-current transmission.

The value of natural gas to the manufacturing industries of Pittsburgh was first foreseen by George Westinghouse, who organized a company to develop this vast resource of western Pennsylvania, and who met in characteristic fashion the engineering problems involved.

Originating with one of the most important inventions connected with railways, the growth of the various Westinghouse industries has been largely identified with railway progress, and it is interesting to note that this progress has represented increased security of life, increased capacity of the railway, and reduced cost of operation. It is stating a simple fact to say that Mr. Westinghouse has been a great factor in the advance of civilization as represented by the important part he has played by introducing improved means of transportation.

Chance has had no place in the success of this man. It has been due to his foresight, courage, and technical skill. As with his first invention, the air brake, the different kinds of apparatus has been developed to answer actual needs, in some cases acknowledged generally, and in others foreseen by him with remarkable prevision. When the apparatus had passed the experimental state and was ready for commercial exploitation, he established factories which are themselves models, and which show the same anticipation of future development. Not only are the buildings handsome and well equipped with the best tools, but the comfort of the employees has been considered in every respect. It is worth noting that the nine-hour day, or rather the fifty-four hour week, was started in the Air Brake Works in 1869, and has been adopted in all the other works as they have been established.

Owing to his many achievements in mechanics, electricity, steam, and gas, his name was known the world over, and he had many distinctions conferred upon him for his achievements and in recognition of the services he rendered the various branches of engineering. His *alma mater*, Union College of Schenectady, conferred upon him the degree of doctor of philosophy. He was decorated with the order of the Legion of Honor, with the order of the Royal Crown of Italy, with the order of Leopold of Belgium. He was the second recipient of the John Fritz medal. He received the degree of doctor of engineering from the Koenigliche Technische Hochschule of Berlin, Germany. He was an honorary member of the American Society of Mechanical Engineers, of which body he was also president in 1910. He was one of the two honorary members of the American Society for the Advancement of Science. He was an honorary member of the National Electric Light Association of America. He was awarded the Scott premium and medal by the Franklin Institute of the state of Pennsylvania. He received the Edison gold medal for meritorious achievements in the alternating current system of electrical distribution. He received the Grashof gold medal from the Society of German Engineers in Germany, which acknowledged him the greatest American engineer.

Mr. Westinghouse was connected with a large number of industries at home and abroad, many of which bore his name. He was president and director of Westinghouse Air Brake Co., Westinghouse Machine Co., Nernst Lamp Co., The Union Switch & Signal Co., Societé Anonyme Westinghouse, Paris, Cooper Hewitt Electric Co., Pittsburgh Meter Co., Societé Italiane Westinghouse, Italy, and many other interests.

Generated on 2024-09-30 00:32 GMT / https://hdl.handle.net/2027/uiug.30112007838003
Public Domain, Google-digitized / http://www.hathitrust.org/access_use#pd-google
Digitized by Google
Original from UNIVERSITY OF ILLINOIS AT URBANA-CHAMPAIGN

Company Reports

The Oakdale Gas. Co. has made application to the California Railroad Commission for a certificate of public convenience to operate at the town of Riverbank, Stanislaus county.

The Oakland, Antioch & Eastern Railway Co. has applied to the California Railroad Commission for authority to issue $700,000 6% four-year convertible gold notes, and to use the proceeds for liquidating outstanding indebtedness.

The Ventura County Power Co. has applied to the California Railroad Commission asking authority to issue $200,000 five-year 6% notes. The funds to be derived from the sale of the notes will be employed in refunding outstanding obligations aggregating $120,850, for the construction and completion of a power line, and a hydro-electric generating plant to be used by the Ventura water system.

The San Francisco-Oakland Terminal Railways Co. has called a special meeting of stockholders for April 7 to vote on a proposed new bonded indebtedness of $35,000,000 to meet the requirements of the service. A new series of bonds is planned, to be known as the 'first and refunding 35-year 5% gold bonds.' These are to be secured by a deed of trust on such portion of the property as may be necessary.

The Mount Whitney Power & Electric Co. has reported for February and the year ended February 28, 1914, as follows:

Month ended Feb. 28, 1914—	
Gross earnings	$ 48,103.70
Expenses, maintenance, and taxes	23,696.08
Net earnings	$ 24,407.62
Interest on bonds	11,400.00
Balance	$ 13,007.62
Year ended Feb. 28, 1914—	
Gross earnings	$581,316.40
Expenses, maintenance, and taxes	268,186.80
Net earnings	$313,129.60
Interest on bonds	136,800.00
Balance	$176,329.60

The American Irrigation Co., of Sacramento, reports for 1913 as follows:

Assets:	
Fixed capital	$260,433.72
Cash	605.66
Accounts receivable	7,725.77
Deficit	49,718.59
Total	$318,483.74
Liabilities:	
Capital stock	$126,007.00
Funded debt	100,000.00
Accounts payable	53,641.95
Other liabilities	38,834.79
Total	$318,483.74
Profit and loss:	
Operating revenue	$ 10,876.95
Operating expenses	12,873.19
Net operating deficit	$ 1,996.24
Taxes, interest, etc.	8,844.85
Deficit Dec. 31, 1912	$ 35,510.64
	$ 49,351.73
Other deductions	366.86
Deficit	$ 49,718.59

The Coalinga Gas & Power Co. reports for 1913 as follows:

Assets:	
Fixed capital	$ 45,546.39
Cash	1,605.30
Accounts receivable	2,507.07
Discount on stocks and bonds	21,532.08
Other assets	743.30
Total	$ 71,934.14
Liabilities:	
Capital stock	$ 46,738.66
Accounts payable	4,850.00
Reserves	1,955.85
Other liabilities	586.98
Surplus	17,802.65
	$ 71,934.14
Profit and loss:	
Balance Dec. 31, 1912	$ 16,881.87
Profit and loss for year	3,272.69
	$ 20,154.56
Additions or deductions	2,351.91
Balance	$ 17,802.65

Generated on 2024-09-30 00:36 GMT / https://hdl.handle.net/2027/uiug.30112007838003
Public Domain, Google-digitized / http://www.hathitrust.org/access_use#pd-google
Digitized by Google
Original from UNIVERSITY OF ILLINOIS AT URBANA-CHAMPAIGN

Engineer's Note Book

THE TORSION OF SHAFTS under a given stress may be obtained from the following formula:

$$a = \frac{21M}{0.196Gd^4} \text{ in which}$$

a = angle of torsion in circular measure, degrees
l = length of shaft, inches
M = torsion moment, inch-pounds
G = modulus of transverse elasticity = 11,000,000 for machinery steel
d = diameter of shaft, inches

THE power transmitted by ropes depends upon the tension and the speed, the power increasing with the speed until the influence of centrifugal force begins to preponderate. Let

T = tension on driving side of rope;
t = tension on slack side of rope;
F = tension due to centrifugal force;
v = velocity of rope, in feet, per minute;
W = weight of rope, in pounds, per foot;
g = acceleration of gravity.

The value of W, the weight per foot for a rope of diameter, D, or circumference, C, is

$$W = 0.3\,D^2 = 0.032\,C^2$$

We have for the tension due to centrifugal force

$$F = \frac{Wv^2}{g}$$

Assuming that the tension on the slack side necessary for giving adhesion is equal to one-half the force doing useful work on the driving side and calling this available tension for useful work R, we have

$$R = \tfrac{2}{3}\,(T - F).$$

The tension on the slack side to give the required adhesion will, therefore, be equal to $\tfrac{1}{3}\,(T - F)$, whence we have

$$t = \tfrac{1}{3}\,(T - F) + F.$$

Since F increases with the square of the velocity, there are, with increasing speeds, a decreasing useful force and an increasing tension, t, on the slack side. The horsepower may, therefore, be obtained from the following formula:

$$Hp. = \frac{2v\,(T - F)}{3 \times 33{,}000}$$

THE capacity of safety valves, according to the regulations of the Board of Supervising Inspectors of the U. S. Steamboat Inspection Service, is given in the following formula:

$$A = 0.2074\,\frac{W}{P} \text{ in which}$$

A = area of valve disc, inches
W = weight of steam discharged per hour, pounds
P = absolute pressure, pounds per sq. in.

A RATIONAL FORMULA for the strength of gear teeth is given by Guido H. Marx as follows:

$$W = \frac{s\,p\,f}{k}\left(0.154 - \frac{1.26}{n}\right)va \quad \text{in which}$$

W = safe working load at pitch-line, pounds
s = modulus of rupture = 36,000
p = circular pitch, inches
f = width of face, inches
k = factor of safety
n = number of teeth in gear
v = velocity coefficient from table
a = arc of action coefficient from table

VELOCITY COEFFICIENTS

Velocity at pitch line, ft. per min.:	0	100	150	200	300	400	500
Coefficient v:	1	0.80	0.75	0.72	0.70	0.68	0.66

ARC OF ACTION COEFFICIENTS

Ratio: $\frac{\text{Arc of action}}{\text{pitch arc}}$	1	1.4	1.6	1.7	1.8	1.9	1.95	2.00
Coefficient a:	1	1.05	1.1	1.15	1.24	1.38	1.47	1.60

ACCORDING to A. D. Harrison, the power required to move heavy loads on wheels may be calculated by the following formula:

$$\text{Brake-hp.} = 0.0097\left[\frac{WS}{D\ (d + 0.7)}\right] \text{ in which}$$

W = total weight of structure, tons
S = speed, feet per minute
D = diameter of wheels, inches
d = diameter of axles, inches

The coefficient of rolling friction is taken at 0.035, the coefficient of sliding friction at 0.1, and the efficiency of the gearing at 0.70.

Generated on 2024-09-30 00:33 GMT / https://hdl.handle.net/2027/uiug.30112007838003
Public Domain, Google-digitized / http://www.hathitrust.org/access_use#pd-google
Digitized by Google
Original from UNIVERSITY OF ILLINOIS AT URBANA-CHAMPAIGN

Engineering News

Petroleum

California oil dividends for February were exceptionally small as compared with other months. The list follows:

Amalgamated	$50,000
Amer. Petrol. (pfd.)	8,755
Caribou	16,140
Common	39,607
Mascot	3,000
Rice Ranch	3,000
Section 25	10,000
San Fernando & McKittrick	10,000
West Coast	15,000
Western Union	10,000

California field operations and production for January and February were as follows:

JANUARY.

Field.	Rigs completed during month.	Wells: Drilling.	Wells: Completed during month.	Wells: Abandoned during month.	Wells: Producing.	Production for month.
Kern River	2	6	..	..	1183	676,337
McKittrick	..	2	..	..	265	329,045
Midway-Sunset	8	105	11	..	1273	4,226,315
Lost Hills-Belridge	..	14	12	..	211	471,980
Coalinga	..	27	2	4	861	1,346,782
Lompoc-Santa Maria	..	8	..	..	241	455,968
Ventura County-Newhall	3	28	2	..	416	73,919
Los Angeles-Salt Lake	1	5	1	..	698	203,456
Whittier-Fullerton	1	56	3	..	508	1,135,104
Summerland	..	..	..	..	125	4,950
Total	15	251	31	4	5781	8,923,856

FEBRUARY

Field.	Rigs completed during month	Drilling	Completed during month	Abandoned	Producing	Production for month	Daily average.
Kern River	..	5	2	..	1,190	632,401	22,585.75
McKittrick	..	2	..	8	266	307,884	10,995.85
Midway-Sunset	10	858	26	6	1,282	3,725,557	133,055.60
Lost Hills-Belridge	3	13	5	4	220	411,002	14,675.07
Coalinga	..	23	1	2	846	1,249,211	44,614.68
Lompoc-Santa Maria	..	10	..	..	241	347,624	12,415.14
Ventura County-Newhall	1	21	1	..	413	55,502	1,982.21
Los Angeles-Salt Lake	..	5	1	1	700	202,437	7,229.09
Whittier-Fullerton	3	61	8	2	504	1,007,070	35,966.78
Summerland	..	..	..	..	125	4,950	176.78
Total	17	225	44	23	5,787	7,943,638	

Daily average production, 28 days, 283,701.36 barrels.
Shipments, 7,384,406; daily average, 263,728.78.
Daily average surplus, 19,912.56.
Stocks, March 1, 51,180,067.

Generated on 2024-09-30 00:30 GMT / https://hdl.handle.net/2027/uiug.30112007838003
Public Domain, Google-digitized / http://www.hathitrust.org/access_use#pd-google
Digitized by Google
Original from UNIVERSITY OF ILLINOIS AT URBANA-CHAMPAIGN

Streets and Roads

San Jose, Cal.—The county and state highway officials in combination with the property owners will repave the 120-ft. boulevard with asphalt between this city and Santa Clara at an expense of approximately $200,000. Electroliers will be erected 100 ft. apart on either side of the road.

Redwood City, Cal.—New highways amounting to $249,000 are under construction and specifications for $250,000 additional work have been adopted. This is part of the new roads system for which bonds amounting to $1,250,000 have been sold. J. V. Neuman is county surveyor.

San Francisco, Cal.—Specifications for grading, paving, and curbing a portion of Shotwell street at a cost of $16,477, for grading Plymouth avenue at a cost of $9000, and for paving a portion of Army street, have been approved by the Board of Works. ——A bridge is to be built by the Ocean Shore railroad on Ocean avenue.——The Board of Public Works has recommended vitrified brick pavement for Third between Market and King streets at an estimated cost of $85,000.

Sacramento, Cal.—The following were the low bids for certain portions of the State Highway: San Mateo county from Daly City to San Francisco, Bates, Borland & Ayer of San Francisco, $59,925.40, material furnished by state, $26,366.55; San Diego county from Las Flores to west boundary line, Taylor Berlinon of Los Angeles, $74,951, materials to be furnished by the state, $24,354.30. Sealed proposals will be received at the office of the California Highway Commission, Forum building, Sacramento, until 2 p.m., April 13, for the following sections of the State Highway: Solano county, from Benicia to a point 2.5 miles south of Cordelia, about 9 miles in length, to be built of portland cement concrete; Alameda county, from Hayward to Valle Vista school, about 3.1 miles in length, to be built of portland cement concrete; Alameda county, from Hayward to Oakland, about 5.1 miles in length, to be surfaced with asphaltic concrete; Kern county, from the northerly county boundary to Dearborn, about 12.4 miles in length, to be built of portland cement concrete; Ventura county, from Sea Cliff to the westerly county boundary, about 5.1 miles in length, to be built of portland cement concrete.

Weaverville, Cal.—Trinity county will vote in November upon a proposed bond issue to provide $125,000 for county road improvements.

La Grande, Ore.—Sewer bonds to the amount of $47,392 have been sold to the Portland Trust & Savings Company.

Spokane, Wash.—The surveys made by J. W. Strack, county engineer, for the Moran road extension into Rockford have been approved.——A contract has been awarded to the Bitu-Mass Paving Co., amounting to $8386 for paving along the west side of Mission park.——Contracts for state highway improvements have been awarded to the Carlson-Chindahl Land Co. amounting to $65,921 for 14.1 miles, from Spokane to Spangle; Hassam Paving Co. amount $66,541 for 11.9 miles from Spangle to Rosalia; Wilson Bailey Construction Co. amount $19,785 for 8 miles into Walla Walla; S. Normile, amount $66,631 for 6 miles from Naches to National park; W. F. Manney, amount $49,326 for 11.3 miles from Enumclaw to National park.

Street improvements have been resumed in charge of A. D. Butler, assistant city engineer.——The County Commissioners have approved plans for building 5.8 miles of macadam road north of Dartford at an estimated cost of $35,000 and 17 miles of additional road commenced in 1913 are to be completed.——Plans for 13.6 miles of highway for the new Palouse project have been rejected by the County Commission.

Pullman, Wash.—The City Council has voted to proceed with improvements by paving several streets in the main business section of the city approximating 25,000 sq. yd. Mr. Edwards, city engineer, estimates the cost at $35,000.

Olympia, Wash.—Yakima county has applied to the State Highway Department for crushed rock for permanent highway work. The Selah quarry will probably be reopened.

Pomeroy, Wash.—Bids for the construction of four concrete bridges are called for by the City Commissioners.

Dayton, Wash.—The City Council will macadamize Third and Fourth streets at a cost of $10,000.

Davenport, Wash.—Contract for nearly six miles of highway from Davenport south has been awarded Pugh & Arenz of Monroe, Washington, at a cost of $29,700. The contractors will erect a crushing plant.

Toppenish, Wash.—The citizens have raised $2800 for road improvement. The

Generated on 2024-09-30 00:39 GMT / https://hdl.handle.net/2027/uiug.30112007838003
Public Domain, Google-digitized / http://www.hathitrust.org/access_use#pd-google
Digitized by Google
Original from UNIVERSITY OF ILLINOIS AT URBANA-CHAMPAIGN

County Commissioners will add $5000 to this amount.

Kellogg, Idaho.—A paving engineer is to be employed by the city to take charge of extensive street improvements. Cement concrete streets and roads are to be built.

Wallace, Idaho.—The bid of Warren Bros. Construction Co. to pave improvement district No. 1 with bitulithic resurfacing at a cost of 1.69 per sq. yd. has been accepted.

Miscellaneous Engineering Construction

San Francisco, Cal.—The State Highway Commissioners have awarded a contract to the Healy Tibbets Construction Co. for two car ferry slips at a cost of $110,600.——Contract has been awarded to the Pacific Creosoting Co. for furnishing creosoted piling for one year, beginning April 1, at a monthly average cost of $55,436.50.——The lowest bids for furnishing concrete trolley poles for the municipal railway was given by H. S. Tittle, and for underground conduit materials by Pierson, Roeding & Company.

Oakland, Cal.—Contract for the construction of the concrete walls and granite base for the municipal auditorium has been awarded to Christensen Bros. amounting to $196,360.

Sacramento, Cal.—The Capitol National Bank has purchased Sacramento sewer and drainage bonds for $200,600.

Colusa, Cal.—The proposed bond issue of $452,000 providing for a Hall of Records, highways, bridges, and culverts has been approved by the voters.

Rio Vista, Cal.—A new bridge between Solano and Sacramento counties is to be built. The bridge will be 3200 ft. long consisting of 20, 150-ft. stationary spans and 1, 200-ft. lift span. It will be a steel structure set on cylindrical piers driven to bedrock. F. A. Steiger is county surveyor.

Chico, Cal.—The City Trustees have given a franchise for 50 years to the Southern Pacific Co. to construct modern railway yards through the city.

Walnut Grove, Cal.—The Southern Pacific Co. will erect a $50,000 wharf at this point.

Orland, Cal.—The Stony Creek bridge has been completed at a cost of $115,000. It is 1100 ft. long and is constructed entirely of reinforced concrete.

Jackson, Cal.—It is proposed to build a complete new sewer system.

Willows, Cal.—A contract for a concrete wall 400 ft. long has been placed by the County Supervisors with Concanon & Co. of San Francisco. The cost will be $18,000. L. C. Stiles is county engineer.

Pittsburgh, Cal.—Two new bridges have been built by Johnson and Lanteri for the Sutter Basin Improvement Co. at a cost of $90,000 each.

Marysville, Cal.—Plans have been made by Charles Trow for a reinforced concrete bridge to be erected over the Yuba river at the foot of D street. Leslie B. Crook, county engineer, is making borings for the foundation.

Richmond, Cal.—The suction dredge *Los Arboles* has been completely overhauled and fitted with new boilers and engines by Moore & Scott Iron Works and is now being employed by the Ellis Landing & Dock Co. for excavating the Inner Harbor.

Salt Lake City, Utah.—A contract has been awarded to Mullins & Palm for the city creek aqueduct at a cost of $9288.——It is proposed to widen the North Temple viaduct to 52 ft. at a cost of about $65,000. The County Commissioners have decided to build three highway bridges at a cost of $2000; $175,000 is to be spent for highway improvements in 1914.

Walla Walla, Wash.—The Northern Pacific railroad is about to commence the construction of a new freight depot at a cost of $200,000. F. M. Smith is engineer in charge of the work.

Irrigation and Water Supply

San Francisco, Cal.—At a meeting of the bond holders of the West Sacramento Co. it was decided to refrain from the collection of coupons until the Company can carry this charge from interest payments. It has been estimated that the debt per acre on the property is $410.

Davis, Cal.—The Davis Water Co., owned by W. C. Stone, is contemplating the construction of a reinforced concrete standpipe of 300,000 gal. capacity. C. F. Wieland of San Francisco is consulting engineer.

Red Bluff, Cal.—It has been announced that the preliminary survey for the Iron Cañon irrigation project has been completed by C. F. Dillard.

Redding, Cal.—The Board of Supervisors has appropriated $5500 for preliminary work on the proposed Pit River irrigation

Generated on 2024-09-30 00:29 GMT / https://hdl.handle.net/2027/uiug.30112007838003
Public Domain, Google-digitized / http://www.hathitrust.org/access_use#pd-google
Digitized by Google
Original from UNIVERSITY OF ILLINOIS AT URBANA-CHAMPAIGN

Streets and Roads

San Jose, Cal.—The county and state highway officials in combination with the property owners will repave the 120-ft. boulevard with asphalt between this city and Santa Clara at an expense of approximately $200,000. Electroliers will be erected 100 ft. apart on either side of the road.

Redwood City, Cal.—New highways amounting to $249,000 are under construction and specifications for $250,000 additional work have been adopted. This is part of the new roads system for which bonds amounting to $1,250,000 have been sold. J. V. Neuman is county surveyor.

San Francisco, Cal.—Specifications for grading, paving, and curbing a portion of Shotwell street at a cost of $16,477, for grading Plymouth avenue at a cost of $9000, and for paving a portion of Army street, have been approved by the Board of Works. ——A bridge is to be built by the Ocean Shore railroad on Ocean avenue.——The Board of Public Works has recommended vitrified brick pavement for Third between Market and King streets at an estimated cost of $85,000.

Sacramento, Cal.—The following were the low bids for certain portions of the State Highway: San Mateo county from Daly City to San Francisco, Bates, Borland & Ayer of San Francisco, $59,925.40, material furnished by state, $26,366.55; San Diego county from Las Flores to west boundary line, Taylor Berlinon of Los Angeles, $74,951, materials to be furnished by the state, $24,354.30. Sealed proposals will be received at the office of the California Highway Commission, Forum building, Sacramento, until 2 p.m., April 13, for the following sections of the State Highway: Solano county, from Benicia to a point 2.5 miles south of Cordelia, about 9 miles in length, to be built of portland cement concrete; Alameda county, from Hayward to Valle Vista school, about 3.1 miles in length, to be built of portland cement concrete; Alameda county, from Hayward to Oakland, about 5.1 miles in length, to be surfaced with asphaltic concrete; Kern county, from the northerly county boundary to Dearborn, about 12.4 miles in length, to be built of portland cement concrete; Ventura county, from Sea Cliff to the westerly county boundary, about 5.1 miles in length, to be built of portland cement concrete.

Weaverville, Cal.—Trinity county will vote in November upon a proposed bond issue to provide $125,000 for county road improvements.

La Grande, Ore.—Sewer bonds to the amount of $47,392 have been sold to the Portland Trust & Savings Company.

Spokane, Wash.—The surveys made by J. W. Strack, county engineer, for the Moran road extension into Rockford have been approved.——A contract has been awarded to the Bitu-Mass Paving Co., amounting to $8386 for paving along the west side of Mission park.——Contracts for state highway improvements have been awarded to the Carlson-Chindahl Land Co. amounting to $65,921 for 14.1 miles, from Spokane to Spangle; Hassam Paving Co. amount $66,541 for 11.9 miles from Spangle to Rosalia; Wilson Bailey Construction Co. amount $19,785 for 8 miles into Walla Walla; S. Normile, amount $66,631 for 6 miles from Naches to National park; W. F. Manney, amount $49,326 for 11.3 miles from Enumclaw to National park.

Street improvements have been resumed in charge of A. D. Butler, assistant city engineer.——The County Commissioners have approved plans for building 5.8 miles of macadam road north of Dartford at an estimated cost of $35,000 and 17 miles of additional road commenced in 1913 are to be completed.——Plans for 13.6 miles of highway for the new Palouse project have been rejected by the County Commission.

Pullman, Wash.—The City Council has voted to proceed with improvements by paving several streets in the main business section of the city approximating 25,000 sq. yd. Mr. Edwards, city engineer, estimates the cost at $35,000.

Olympia, Wash.—Yakima county has applied to the State Highway Department for crushed rock for permanent highway work. The Selah quarry will probably be reopened.

Pomeroy, Wash.—Bids for the construction of four concrete bridges are called for by the City Commissioners.

Dayton, Wash.—The City Council will macadamize Third and Fourth streets at a cost of $10,000.

Davenport, Wash.—Contract for nearly six miles of highway from Davenport south has been awarded Pugh & Arenz of Monroe, Washington, at a cost of $29,700. The contractors will erect a crushing plant.

Toppenish, Wash.—The citizens have raised $2800 for road improvement. The

Generated on 2024-09-30 00:31 GMT / https://hdl.handle.net/2027/uiug.30112007838003
Public Domain, Google-digitized / http://www.hathitrust.org/access_use#pd-google
Digitized by Google
Original from UNIVERSITY OF ILLINOIS AT URBANA-CHAMPAIGN

County Commissioners will add $5000 to this amount.

Kellogg, Idaho.—A paving engineer is to be employed by the city to take charge of extensive street improvements. Cement concrete streets and roads are to be built.

Wallace, Idaho.—The bid of Warren Bros. Construction Co. to pave improvement district No. 1 with bitulithic resurfacing at a cost of 1.69 per sq. yd. has been accepted.

Miscellaneous Engineering Construction

San Francisco, Cal.—The State Highway Commissioners have awarded a contract to the Healy Tibbets Construction Co. for two car ferry slips at a cost of $110,600.——Contract has been awarded to the Pacific Creosoting Co. for furnishing creosoted piling for one year, beginning April 1, at a monthly average cost of $55,436.50.——The lowest bids for furnishing concrete trolley poles for the municipal railway was given by H. S. Tittle, and for underground conduit materials by Pierson, Roeding & Company.

Oakland, Cal.—Contract for the construction of the concrete walls and granite base for the municipal auditorium has been awarded to Christensen Bros. amounting to $196,360.

Sacramento, Cal.—The Capitol National Bank has purchased Sacramento sewer and drainage bonds for $200,600.

Colusa, Cal.—The proposed bond issue of $452,000 providing for a Hall of Records, highways, bridges, and culverts has been approved by the voters.

Rio Vista, Cal.—A new bridge between Solano and Sacramento counties is to be built. The bridge will be 3200 ft. long consisting of 20, 150-ft. stationary spans and 1, 200-ft. lift span. It will be a steel structure set on cylindrical piers driven to bedrock. F. A. Steiger is county surveyor.

Chico, Cal.—The City Trustees have given a franchise for 50 years to the Southern Pacific Co. to construct modern railway yards through the city.

Walnut Grove, Cal.—The Southern Pacific Co. will erect a $50,000 wharf at this point.

Orland, Cal.—The Stony Creek bridge has been completed at a cost of $115,000. It is 1100 ft. long and is constructed entirely of reinforced concrete.

Jackson, Cal.—It is proposed to build a complete new sewer system.

Willows, Cal.—A contract for a concrete wall 400 ft. long has been placed by the County Supervisors with Concanon & Co. of San Francisco. The cost will be $18,000. L. C. Stiles is county engineer.

Pittsburgh, Cal.—Two new bridges have been built by Johnson and Lanteri for the Sutter Basin Improvement Co. at a cost of $90,000 each.

Marysville, Cal.—Plans have been made by Charles Trow for a reinforced concrete bridge to be erected over the Yuba river at the foot of D street. Leslie B. Crook, county engineer, is making borings for the foundation.

Richmond, Cal.—The suction dredge *Los Arboles* has been completely overhauled and fitted with new boilers and engines by Moore & Scott Iron Works and is now being employed by the Ellis Landing & Dock Co. for excavating the Inner Harbor.

Salt Lake City, Utah.—A contract has been awarded to Mullins & Palm for the city creek aqueduct at a cost of $9288.——It is proposed to widen the North Temple viaduct to 52 ft. at a cost of about $65,000. The County Commissioners have decided to build three highway bridges at a cost of $2000; $175,000 is to be spent for highway improvements in 1914.

Walla Walla, Wash.—The Northern Pacific railroad is about to commence the construction of a new freight depot at a cost of $200,000. F. M. Smith is engineer in charge of the work.

Irrigation and Water Supply

San Francisco, Cal.—At a meeting of the bond holders of the West Sacramento Co. it was decided to refrain from the collection of coupons until the Company can carry this charge from interest payments. It has been estimated that the debt per acre on the property is $410.

Davis, Cal.—The Davis Water Co., owned by W. C. Stone, is contemplating the construction of a reinforced concrete standpipe of 300,000 gal. capacity. C. F. Wieland of San Francisco is consulting engineer.

Red Bluff, Cal.—It has been announced that the preliminary survey for the Iron Cañon irrigation project has been completed by C. F. Dillard.

Redding, Cal.—The Board of Supervisors has appropriated $5500 for preliminary work on the proposed Pit River irrigation

Generated on 2024-09-30 00:30 GMT / https://hdl.handle.net/2027/uiug.30112007838003
Public Domain, Google-digitized / http://www.hathitrust.org/access_use#pd-google
Digitized by Google
Original from UNIVERSITY OF ILLINOIS AT URBANA-CHAMPAIGN

project. Duryea, Haehl & Gilman of San Francisco have been appointed consulting engineers.

Grass Valley, Cal.—The Water Consumers' Association is preparing data for a project to develop water for irrigation purposes and domestic consumption.

Hanford, Cal.—Seven districts using water from Kings river contemplate uniting in one large district to be known as the Kings River Water Control and Conservation District. It is proposed to build a comprehensive reservoir system below the snow lines at the source of Kings river to impound water for irrigation. Charles King, of this city is interested in the project.

Penryn, Cal.—A movement is under way to secure a domestic water supply system in coöperation with the Pacific Gas & Electric Company.

Anderson, Cal.—A survey is being made for the Anderson and Cottonwood irrigation project whereby 15,000 inches of water from the Sacramento river is to be used for irrigation purposes.

Wilbur, Wash.—The city proposes to install electric automatic pumping machinery for the domestic water supply. David Thompson, J. F. Kunz, and Charles Hudkins constitute the committee having the work in charge.

Omak, Wash.—The Nespelem reclamation project proposes to irrigate 8000 acres of land about 35 miles east of Omak at a cost of about $30 per acre. L. M. Holt of North Yakima had charge of the preliminary survey.

Salt Lake City, Utah.—The application of F. M. Lyman for 30 second feet of water in Parleys Canon has been approved. It is planned to divert the water at a point above the city intake for power purposes.——Plans and specifications have been prepared for the proposed extension of the Piute project canal. C. J. Ulrich is assistant city engineer in charge of the work. Estimated cost is $12,000.——It is stated that work on the dam for the big Piute reservoir will be resumed by the first of April. The dam when completed will be 100 ft. high and 1400 ft. long. The present height is 80 ft. Construction commenced in 1910.

Nephi, Utah.—Preliminary plans and reports on the proposed Nephi irrigation project have been prepared by J. S. Yates, assistant city engineer, and submitted to T. C. Winn who represents the farmers. Pipe-lines, hydro-electric power plants, and pumping plants are to be built.

Boise, Idaho.—The sale of the Lost River irrigation project has again been postponed owing to criticism of the construction of the Mackay dam.——Idaho City has purchased the King Hill irrigation project for $30,000.

Kaysville, Utah.—The Kaysville Irrigation Co. has been authorized by the stockholders to proceed at once with the construction of a dam for the storage of 266 acre feet of water at a cost of about $25,000. The officers of the Company are: William H. Blood, president; John G. M. Barnes, secretary; Warren D. Barnes, Thomas J. Smith and William H. Roueche, directors.

Railways

San Francisco, Cal.—The Ocean Shore Railroad Co. has applied to the Railroad Commission for permission to issue bonds in the sum of $200,000 to provide funds for the electrification of the Ocean Shore road between San Francisco and Half Moon Bay.——The Death Valley Railroad Co. has been granted permission to issue 473 ten-year bonds at a face value of $100 for the purpose of constructing 16 miles of railroad between the Ryan branch of the Tonopah & Tidewater railroad in Inyo county and the Biddy-McCarthy borax mine.——The city engineer has fixed a price of $312,332.67 to be paid by the city for the Union Street Railroad Co.——The contract for building the municipal railway on Van Ness avenue and Chestnut street has been awarded to Mahoney Bros. at a price of $219,747.50. Concrete trolley poles are to be used.——The Northwestern Pacific Railroad Co. has applied to the Railroad Commission for permission to issue bonds in the sum of $5,543,000 for the purpose of making extensions and purchasing new equipment.

Sacramento, Cal.—The Northern Electric Railway Co. has removed its office to this city from San Francisco and Chico.

Dixon, Cal.—A contract has been let by the Sacramento Valley Electric Railroad Co. to J. Hughes Construction Co. for grading the road bed of the Company's line from the Oakland-Antioch & Eastern railway to Dixon, a distance of 11 miles.

Auburn, Cal.—Application for a permit to build a steam narrow-gauge railroad from the Dairy Farm mine to Sheridan, a dis-

Generated on 2024-09-30 00:37 GMT / https://hdl.handle.net/2027/uiug.30112007838003
Public Domain, Google-digitized / http://www.hathitrust.org/access_use#pd-google
Digitized by Google
Original from UNIVERSITY OF ILLINOIS AT URBANA-CHAMPAIGN

tance of 6 miles, has been made by M. A. Newman, manager, representing the Guggenheim interests.

Fresno, Cal.—It is stated that work on both the Fresno interurban line of which J. B. Rogers is manager and the Fresno-Clovis & Academy Interurban Railroad Co., of which F. H. Granger is manager, will commence by the first of April.

Red Lodge, Mont.—The Carbon & Stillwater Electric Railway Co. has been incorporated with a capital stock of $750,000. It is proposed to build a trolley line between Red Lodge and Columbus, a distance of 40 miles. John Dunn of this city is interested in the project.

Portola, Cal.—The Western Pacific railroad plans to line all tunnels in the Feather River cañon with concrete during 1914 at a cost of $240,000. Wooden bridges are to be replaced with steel and concrete at a cost of $180,000. An additional wharf is to be built in Oakland at a cost of $1,000,000.

Portland, Ore.—It is stated that the Northern Pacific Railway Co. will expend between $4,000,000 and $5,000,000 in 1914 for betterments.

Provo, Utah.—The right-of-way has been selected for the proposed Central Utah Railroad Co. from Nioche to a point 20 miles east of Salina. W. O. Creer is president of the Company.

Salt Lake City, Utah.—The Utah Light & Railway Co. has applied for a franchise to extend the Centerville line five miles north. ——The Utah Light & Railway Co. has made tentative plans to expend $1,500,000 to connect Salt Lake and Ogden with an interurban line.

Power, Gas, and Electricity

San Francisco, Cal.—The Southern Mountain Gas Co. has applied to the Railroad Commission for permission to issue $115,000 in bonds for the purpose of building a pipeline from the natural gas fields in the Olinda district, Orange county, to serve the cities of Placentia, Fullerton, Anaheim, Olive, McPherson, El Modena, Santa Ana, Garden Grove and Tustin.——The following applications have been filed with the State Water Commission for the development of water power projects in various parts of the state: Southern Sierras Power Co., three applications of 300 sec. ft. each for units on Baker creek in Inyo county to cost $400,000, $550,000 and $400,000 respectively; Inyo County Water & Power Co. five units including Lost creek 25 in., Walnut creek 100 in., Olanche creek 300 in., Fall creek 100 in., estimated total cost $120,000; Mary F. Baird, power project on the San Joaquin river about four miles above Friant, two projects of 500 sec. ft.; Little Rock Power & Water Co. 2000 in. on Little Rock creek in Los Angeles county for a project estimated to cost $435,648. San Joaquin Light & Power Corporation from 75 to 300 sec. ft. on the north fork of Kings river to develop from 10,000 to 40,000 horse-power.

Portola, Cal.—The Plumas County Supervisors have granted to R. B. Young of Loyalton a franchise to erect a pole line for the purpose of conveying and distributing electricity for power and light purposes.

Placerville, Cal.—The Department of the Interior has withdrawn power sites from entry as follows: 200 acres of land in sections 3 and 29 of T 13 N, R 14 E; and section 3, T 13 N, R 16 E, all within El Dorado county and designated as power site reservoir No. 432 Gerle creek. This is part of a project of the Truckee River General Electric Co. This Company is required under a permit issued on September 9, 1913 to commence work within 12 months on unit No. 1, consisting of reservoirs, ditches, and two power plants known as plants No. 1 and 2 on Pilot creek in township 12 north range 12 east.

Tonopah, Nev.—It is stated that Henry C. Schmidt has arranged through an English syndicate to underwrite a bond issue of $3,000,000 for the development of a power project on the Colorado river. The incorporators are William Forman, W. R. Williams, and Henry C. Schmidt, the name of the Company being the Colorado River Hydro-Electric Co. with offices in Tonopah. The power site is 1½ miles above Fort Caldwell and the first pole line will extend to Kingman, Arizona.

Olympia, Wash.—F. S. Burroughs, engineer for the Public Service Commission, has recently completed the valuation of the North Yakima gas plant of the Pacific Power & Light Co. to be used as the basis of the establishment of new gas rates.

Spokane, Wash.—The American Falls Canal & Power Co. of Bingham county, Idaho, has filed a voluntary petition in bankruptcy with liabilities at $709,221.94 and assets at $550,000.

Generated on 2024-09-30 00:31 GMT / https://hdl.handle.net/2027/uiug.30112007838003
Public Domain, Google-digitized / http://www.hathitrust.org/access_use#pd-google
Digitized by Google
Original from UNIVERSITY OF ILLINOIS AT URBANA-CHAMPAIGN

Personal

H. C. Hoover of the General Petroleum Co. is in London.

Dorsey Hager, geological engineer of Los Angeles, was a recent visitor in San Francisco.

D. Ward King will deliver two lectures on the subject of good roads at Salt Lake City in April.

W. B. Hinchman has been appointed general agent for the Death Valley Railroad Co. in San Francisco.

Richard Eugene Froiseth has completed a tunnel for the Cascade Irrigation Co. near Ellensburg, Washington.

Franklin Remington, president of The Foundation Co. of New York, was a recent visitor in San Francisco.

Eugene L. Ickes, geologist for Pearsons Sons, Ltd., has been on a tour of inspection through the California oilfields.

Halcombe, Flanders and Reed, civil and mining engineers, have opened offices in the Phelan building, San Francisco.

C. C. Thom is investigating irrigation methods and soil composition in behalf of the Washington State College at Pullman, Washington.

Sir William Willcocks will address the National Drainage Congress at Savannah in April on the subject of river regulation and control in antiquity.

Robert Anderson and A. C. Vitch, formerly with the U. S. Geological Survey, have accepted employment on the geological staff of Pearsons Sons, Limited.

Arthur H. Blanchard, professor of highway engineering at Columbia University, recently delivered a series of lectures dealing with road construction at the University of Tennessee.

E. W. Clark, formerly superintendent of the Producers' Pipe-line Co., with headquarters at San Luis Obispo, has been appointed manager of transportation for the Union Oil Co. with headquarters in Los Angeles.

W. A. Bissell has been re-elected president, F. B. Whipple and W. R. Alberger, vice-presidents, Robert Morrison, Jr. secretary, and Kirk Lathrop treasurer of the San Francisco-Oakland Terminal Railways.

Hugh L. Cooper, the builder of the Keokuk power project, has been retained as consulting engineer for the Egyptian government in the construction of the new hydro-electric power project on the Nile river.

Francis G. Wrightson, formerly city superintendent of streets at Sacramento, Paul K. Yost, formerly with the Natomas Consolidated, and B. P. Anderson have entered into a partnership for the purpose of engaging in general contracting.

George H. Harris has been appointed general superintendent, George H. Binkley has been appointed chief engineer in charge of maintenance of way and structure, and Edward M. Boggs has been made chief engineer of docks and wharves for the San Francisco-Oakland Terminal Railways.

Catalogues Received

Yuba Construction Co., 433 California St., San Francisco. Catalogue illustrating irrigation pumps model D.

National Pipe Co., Pittsburgh, Pa. Folder showing corrosive effect on steep pipe as compared to wrought iron.

Providence Engineering Works, Providence, R. I. Catalogue illustrating and describing various types of centrifugal pumps manufactured by this Company.

California Corrugated Culvert Co., Los Angeles and West Berkeley. A beautifully illustrated catalogue descriptive of American ingot iron culverts manufactured by this Company and showing their application and the many advantages in their use.

General Electric Co. Bulletin 45600, 'Vacuum Tube Lightening Arresters'; Bulletin 47400, type F, form K12, 'Oil Switches'; Bulletin 45601 'Aluminum Lightening Arresters for Alternating Current Circuits'; Bulletin A4200 'Strain Insulators and Strain Clamps'; Bulletin 44590, Type ML, 'Governor for Motor Driven Air Compressors.'

C. H. Wheeler Mfg. Co., Philadelphia. Catalogue on Condensers and Auxiliaries. This publication is many steps in advance of the ordinary trade catalogue, as in addition to containing an exceptionally comprehensive description of the apparatus manufactured by this Company, much valuable data are given concerning the engineering features of condensers and kindred auxiliary power plant apparatus. Frank R. Wheeler is district sales manager with offices in the Rialto building, San Francisco.

Generated on 2024-09-30 00:30 GMT / https://hdl.handle.net/2027/uiug.30112007838003
Public Domain, Google-digitized / http://www.hathitrust.org/access_use#pd-google
Digitized by Google
Original from UNIVERSITY OF ILLINOIS AT URBANA-CHAMPAIGN